ETA-Danmark A/S
Göteborg Plads 1
DK-2150 Nordhavn
Tel. +45 72 24 59 00
Fax +45 72 24 59 04
Internet www.etadanmark.dk

Authorised and notified according to Article 29 of the Regulation (EU) No 305/2011 of the European Parliament and of the Council of 9 March 2011

European Technical Assessment ETA-15/0187 of 11/08/2017

I General Part

Technical Assessment Body issuing the ETA and designated according to Article 29 of the Regulation (EU) No 305/2011: ETA-Danmark A/S

Trade name of the construction product:	Pitzl HVP connectors
Product family to which the above construction product belongs:	Three-dimensional nailing plate (Angle brackets and hold-downs for timber-to-timber or timber-to-concrete or steel connections)
Manufacturer:	Pitzl Metallbau GmbH & Co. KG Siemensstraße 26 DE-84051 Altheim Tel.: +49 (0) 8703 9346-0 Telefax: +49 (0) 8703 9346-55 Internet: www.pitzl-connectors.com
Manufacturing plant:	Production plant 1
This European Technical Assessment contains:	71 pages including 3 annexes which form an integral part of the document
This European Technical Assessment is issued in accordance with Regulation (EU) No 305/2011, on the basis of:	Guideline for European Technical Approval (ETAG) No. 015 Three Dimensional Nailing Plates, April 2013, used as European Assessment Document (EAD).
This version replaces:	The ETA with the same number issued on 2015-04-14

II SPECIFIC PART OF THE EUROPEAN TECHNICAL ASSESSMENT

1 Technical description of product and intended use

Technical description of the product
Pitzl HVP connectors are two-piece, face-fixed beam hangers to be used in timber to timber or timber to concrete or steel connections.

The HVP connectors are made from aluminium alloy EN AW-6082 T6 according to EN 755-2 Mechanical properties, EN 755-9 Tolerance and EN 573-3 Chemical analysis. Dimensions, hole positions and typical installations are shown in Annexes A and C.

2 Specification of the intended use in accordance with the applicable EAD

HVP connectors are intended for use in making connections in load bearing timber structures, as a connection between a wood based joist and a solid timber or wood based header or columns as well as connections between a timber joist and a concrete structure or a steel member, where requirements for mechanical resistance and stability and safety in use in the sense of the Basic Works Requirements 1 and 4 of Regulation (EU) 305/2011 shall be fulfilled.

The HVP connectors can be installed as connections between wood based members such as:

- Structural solid timber according to EN 338 / EN 14081,
- Glulam according to EN 14080,
- LVL according to EN 14374,
- Parallam PSL,
- Intrallam LSL,
- Glued solid timber according to EN 14080,
- Cross laminated timber,

However, the calculation methods are only allowed for a characteristic wood density of up to 460 kg/m^3. Even though the wood based material may have a larger density, this must not be used in the formulas for the load-carrying capacities of the fasteners.

Annex B states the formulas for the characteristic load-carrying capacities of the connections with HVP connectors. The design of the connections shall be in accordance with Eurocode 5 or a similar national Timber Code.

It is assumed that the forces acting on the connection are the following F_1, F_2, F_3 and F_4. The force F_1 acts perpendicular to the connector plate, F_2 shall act in and F_3 against the direction of insertion. The force F_4 is assumed to act with an eccentricity e_{45} with regard to the centre of gravity of the connector plates. With the exception of F_2 it is assumed that the forces are acting in the centre plane of the connector.

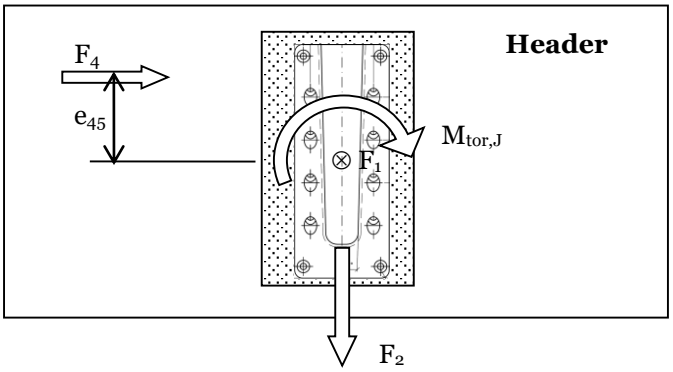

It is assumed that the header beam is prevented from rotating. If the header beam only has installed a HVP connector on one side the eccentricity moment $M_v = F_d \cdot (B_H / 2)$ shall be considered. The same applies when the header has HVP connectors on both sides, but with vertical forces which differ more than 20%.

The HVP connectors are intended for use for connections subject to static or quasi static loading.

The HVP connectors are for use in timber structures subject to the dry, internal conditions defined by the service classes 1 and 2 of EN 1995-1-1:2010, (Eurocode 5).

The scope of the brackets regarding resistance to corrosion shall be defined according to national provisions that apply at the installation site considering environmental conditions.

The provisions made in this European Technical Assessment are based on an assumed intended working life of the connectors of 50 years.

The indications given on the working life cannot be interpreted as a guarantee given by the producer or Assessment Body, but are to be regarded only as a means for choosing the right products in relation to the expected economically reasonable working life of the works.

3 Performance of the product and references to the methods used for its assessment

Characteristic	Assessment of characteristic
3.1 Mechanical resistance and stability*) (BWR1)	
Characteristic load-carrying capacity	See Annex B
Stiffness	No performance determined
Ductility in cyclic testing	No performance determined
3.2 Safety in case of fire (BWR2)	
Reaction to fire	The connectors are made from aluminium classified as **Euroclass A1** in accordance with EN 13501-1 and EC decision 96/603/EC, amended by EC Decision 2000/605/EC
Resistance to fire	See annex B
3.3 Hygiene, health and the environment (BWR3)	
Influence on air quality	The product does not contain/release dangerous substances specified in TR 034, dated March 2012**)
3.7 Sustainable use of natural resources (BWR7)	No Performance Determined
3.8 General aspects related to the performance of the product	The connectors have been assessed as having satisfactory durability and serviceability when used in timber structures using the timber species described in Eurocode 5 and subject to the conditions defined by service class 1 and 2
Identification	See Annex A

*) See additional information in section 3.9 – 3.12.

**) In addition to the specific clauses relating to dangerous substances contained in this European technical Assessment, there may be other requirements applicable to the products falling within its scope (e.g. transposed European legislation and national laws, regulations and administrative provisions). In order to meet the provisions of the Construction Products Regulation, these requirements need also to be complied with, when and where they apply.

3.9 Methods of verification

The characteristic load-carrying capacities are based on the characteristic values of the screw connections and the aluminium plates. To obtain design values the capacities have to be divided by different partial factors for the material properties, the screw connection in addition multiplied with the coefficient k_{mod}.

According to EN 1990 (Eurocode – Basis of design) paragraph 6.3.5 the design value of load-carrying capacity may be determined by reducing the characteristic values of the load-carrying capacity with different partial factors.

Thus, the characteristic values of the load–carrying capacity are determined also for timber failure $F_{Rk,H}$ (obtaining the embedment strength of screws subjected to shear or the withdrawal capacity of the most loaded screw, respectively) as well as for aluminum plate failure $F_{Rk,ALU}$. The design value of the load–carrying capacity is the smaller value of both load–carrying capacities.

$$F_{Rd} = \left\{ \frac{k_{mod} \times F_{Rk,H}}{\gamma_{M,H}} ; \frac{F_{Rk,ALU}}{\gamma_{M,ALU}} \right\}$$

Therefore, for timber failure the load duration class and the service class are included. The different partial factors γ_M for aluminium or timber, respectively, are also correctly taken into account.

3.10 Mechanical resistance and stability

See annex B for characteristic load-carrying capacities of the HVP connectors.

The characteristic capacities of the HVP connectors are determined by calculation assisted by tests as described in the EOTA Guideline 015 clause 5.1.1. They should be used for designs in accordance with Eurocode 5 or a similar national Timber Code.

The design models allow the use of fasteners described in the table on page 59 in Annex A:

- *Screws in accordance with EN 14592 or an ETA based on the relevant conditions*

In the formulas in Annex B the capacities for screws calculated from the formulas of Eurocode 5 are used assuming a thin steel plate when calculating the lateral fastener load-carrying-capacity.

No performance has been determined in relation to ductility of a joint under cyclic testing. The contribution to the performance of structures in seismic zones, therefore, has not been assessed.

See annex B for the joint's stiffness properties - to be used for the analysis of the ultimate or serviceability limit state.

3.11 Aspects related to the performance of the product

3.11.1 Corrosion protection in service class 1 and 2.
In accordance with ETAG 015 the aluminium HVP connectors are produced from aluminium alloy EN AW-6082 T6 according to EN 755-2 Mechanical properties, EN 755-9 Tolerance and EN 573-3 Chemical analysis.

3.12 General aspects related to the fitness for use of the product

The performance given in this ETA are based on the following:

Header/column – support conditions

- The header beam or the column shall be restrained against rotation and be free from wane under the HVP connector.

  If the header carries joists only on one side the eccentricity moment from the joists $M_{ec} = R_{joist}$ ($b_{header}/2$) shall be considered for HVP connectors at the strength verification of the header.
  R_{joist} Reaction force from the joists
  b_{header} Width of header

- For a header with joists from both sides but with different reaction forces a similar consideration applies.

Wood to wood connections

- HVP connectors are fastened to wood-based joists or headers/columns by screws.
- There shall be screws in all holes.
- The characteristic capacity of the HVP connector joint is calculated according to the manufacturer's technical documentation dated 2015-03-12.
- The HVP connector joint is designed in accordance with Eurocode 5 or an appropriate national code.
- The gap between the end of the joist and the surface, where contact stresses can occur during loading shall be limited. This means that for HVP connectors the gap between the surface of the connector plates and the timber surface shall be maximum 1 mm.

- The end grain of the joist and the surface of the header or column shall have a plane surface against the whole HVP connector.
- The depth of the joist shall be so large that the bottom of the joist is at least 10 mm below the lower screw tip in the joist.
- Screws to be used shall have a diameter and head shape which fits the holes of the HVP connectors.

4 Attestation and verification of constancy of performance (AVCP)

4.1 AVCP system

According to the decision 97/638/EC of the European Commission1, as amended, the system(s) of assessment and verification of constancy of performance (see Annex V to Regulation (EU) No 305/2011) is 2+.

5 Technical details necessary for the implementation of the AVCP system, as foreseen in the applicable EAD

Technical details necessary for the implementation of the AVCP system are laid down in the control plan deposited at ETA-Danmark prior to CE marking.

Issued in Copenhagen on 2017-08-11 by

Thomas Bruun
Managing Director, ETA-Danmark

Annex A
Product details and definitions

Timber-to-timber connections

HVP connector 88004.0000 (25 x 40 x 12 mm)
with uplift protection : 88004.1000

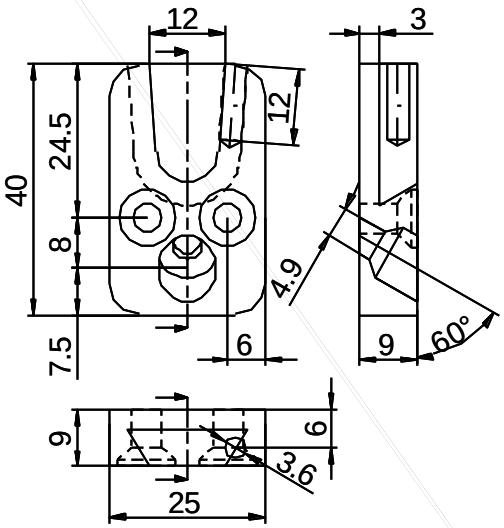

Part 1

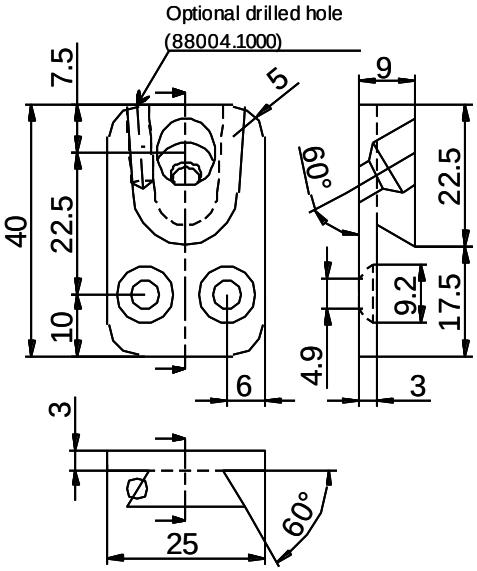

Part 2

HVP connector 88006.0000 (25 x 60 x 12 mm)
with uplift protection : 88006.1000

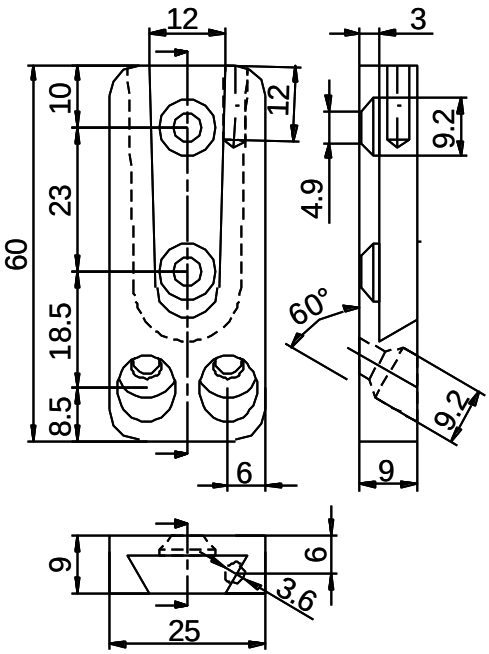

Part 1

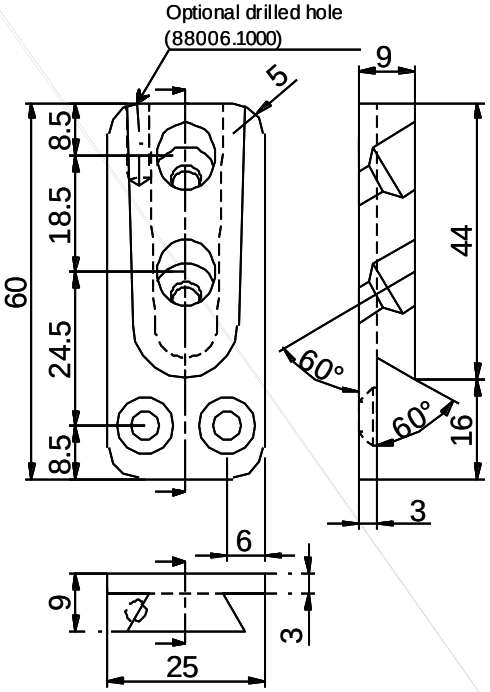

Part 2

HVP connector 88008.0000 (25 x 80 x 12 mm)
with uplift protection : 88008.1000

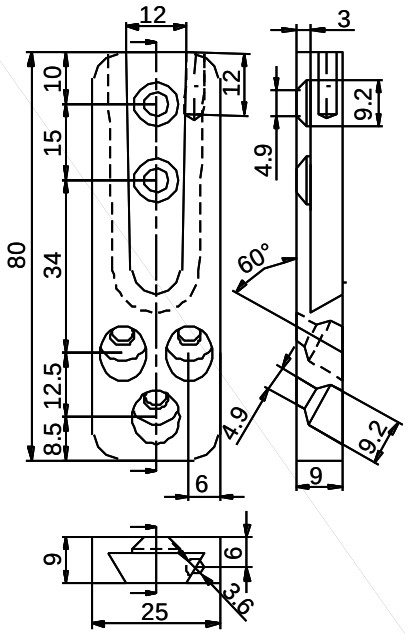

Part 1

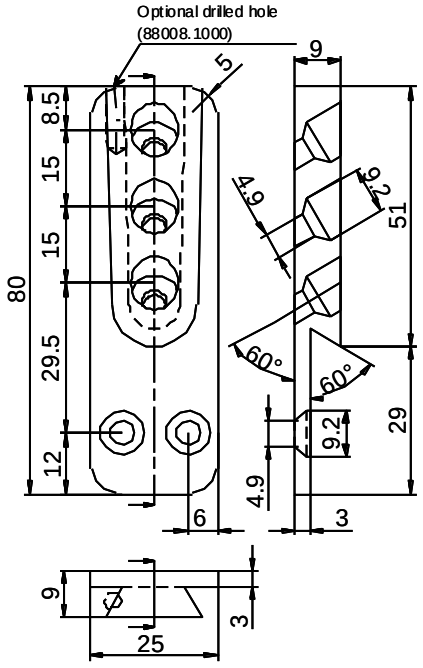

Part 2

HVP connector 88010.0000 (25 x 100 x 12 mm)
with uplift protection : 88010.1000

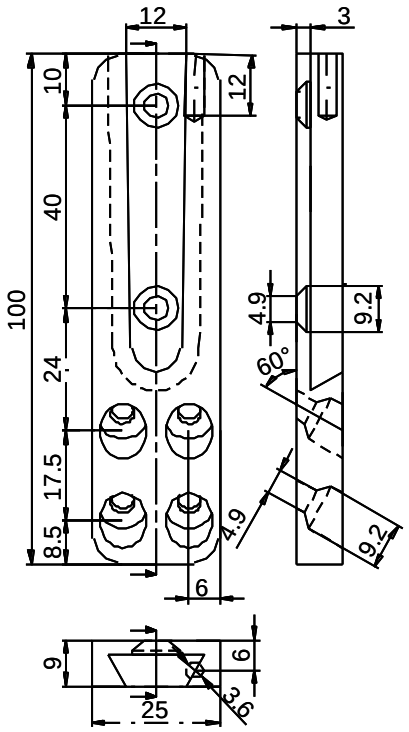

Part 1

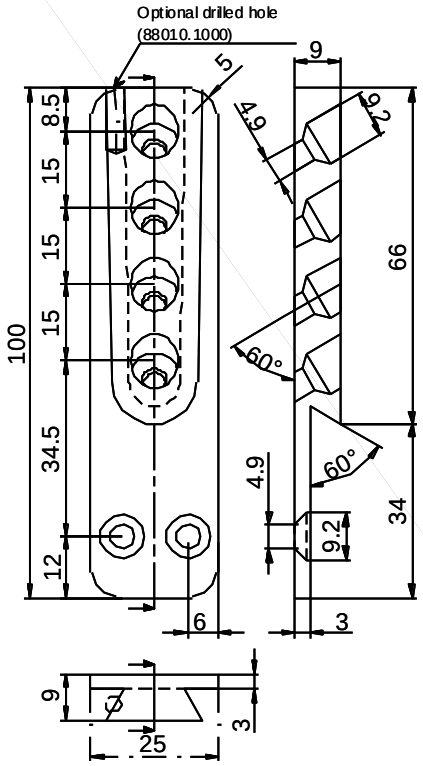

Part 2

HVP connector 88107.0000 (40 x 70 x 12 mm)
with uplift protection : 88107.1000

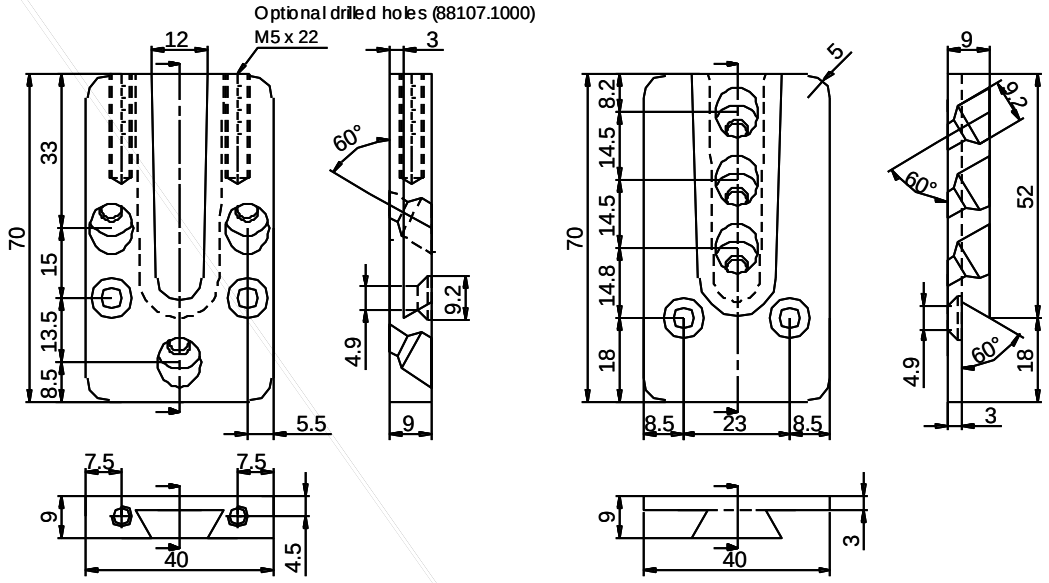

Part 1 Part 2

HVP connector 88109.0000 (40 x 90 x 12 mm)
with uplift protection : 88109.1000

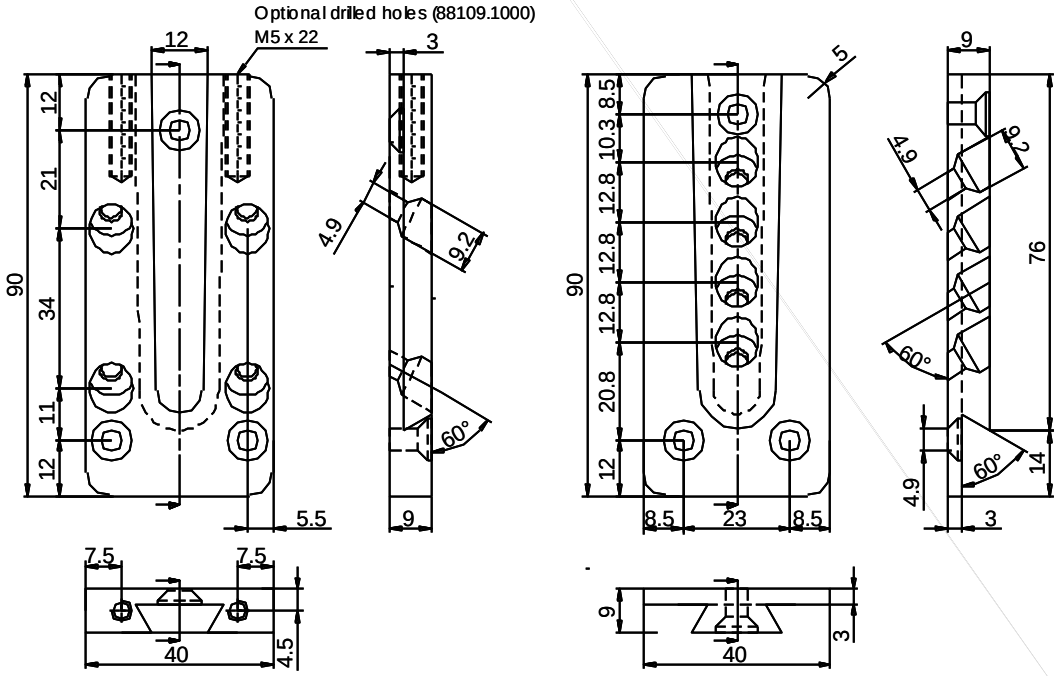

Part 1 Part 2

HVP connector 88111.0000 (40 x 110 x 12 mm)
with uplift protection : 88111.1000

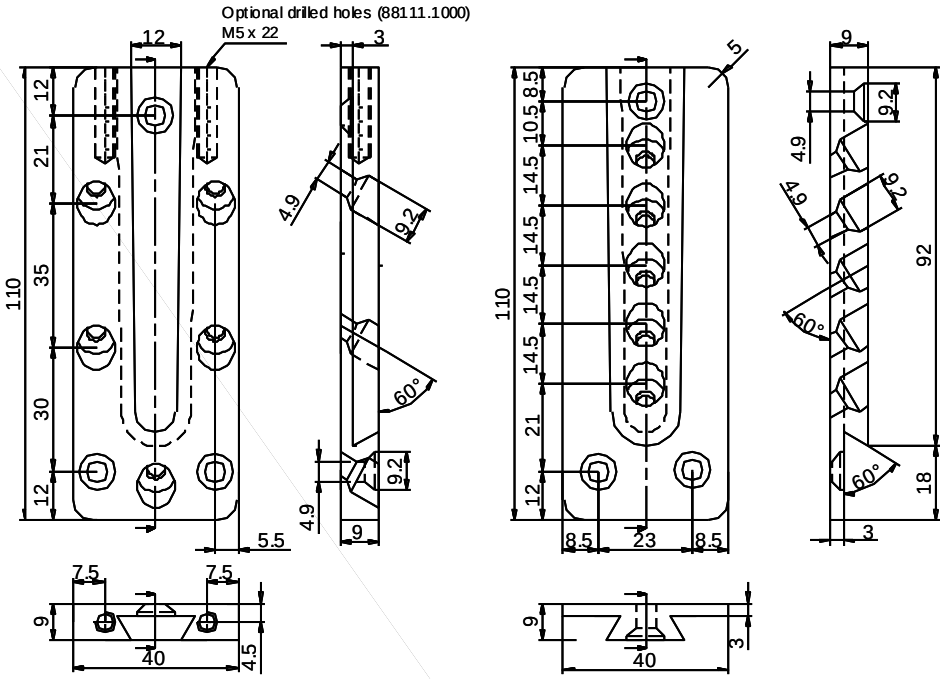

Part 1 Part 2

HVP connector 88113.0000 (40 x 130 x 12 mm)
with uplift protection : 88113.1000

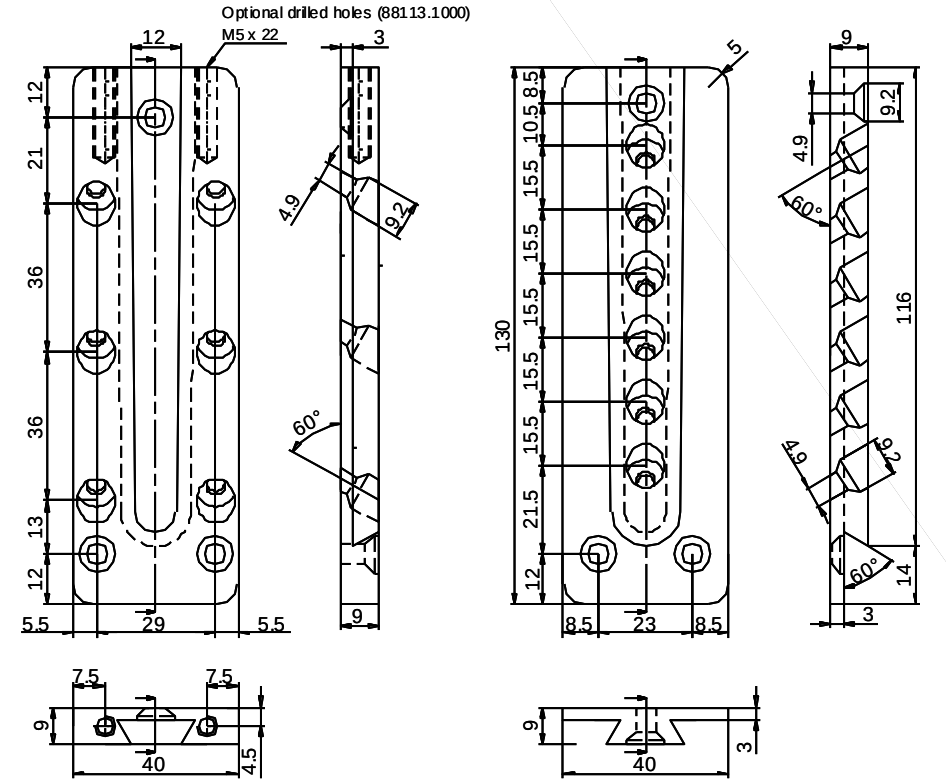

Part 1 Part 2

HVP connector 88115.0000 (40 x 150 x 12 mm)
with uplift protection : 88115.1000

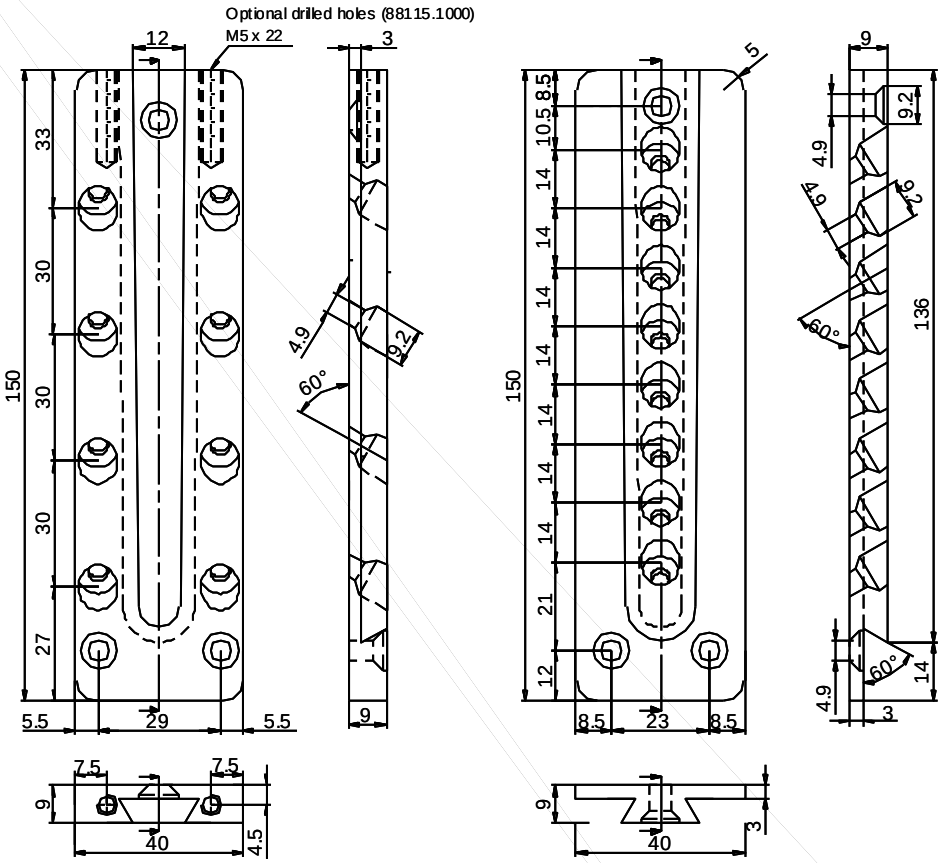

Part 1 Part 2

HVP connector 88210.0000 (60 x 100 x 12 mm)
with uplift protection : 88210.1000

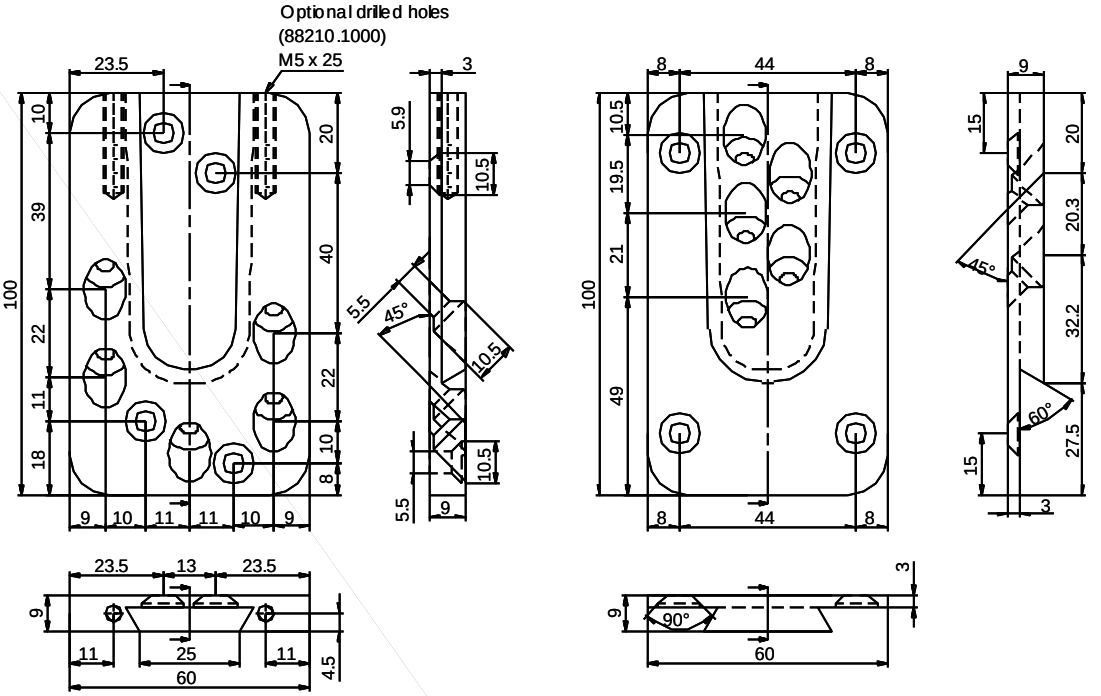

Part 1 Part 2

HVP connector 88214.0000 (60 x 140 x 12 mm)
with uplift protection : 88214.1000

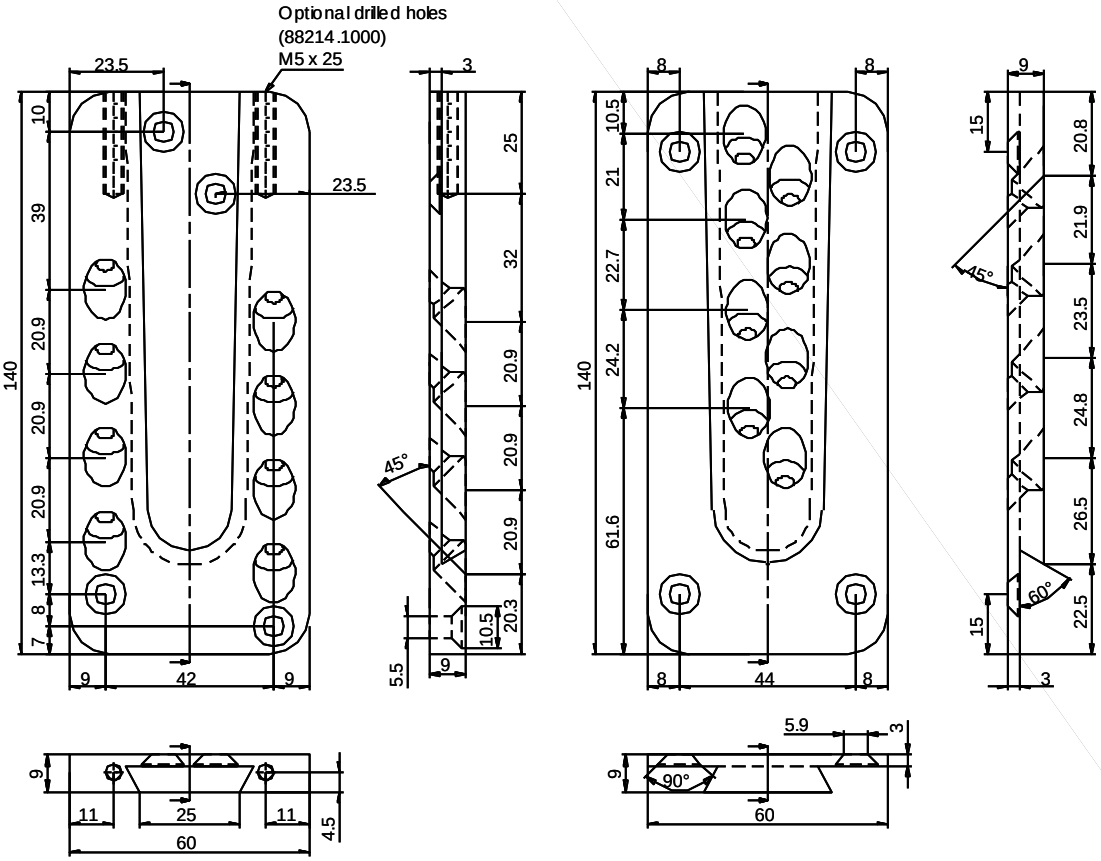

Part 1 Part 2

HVP connector 88318.0000 (80 x 180 x 12 mm)
with uplift protection : 88318.1000

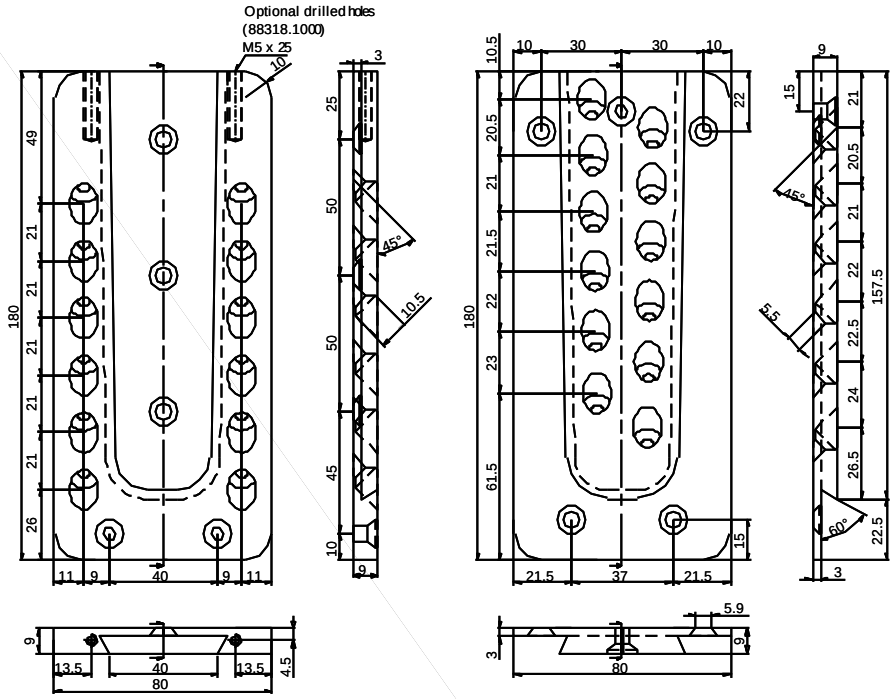

HVP connector 88322.0000 (80 x 220 x 12 mm)
with uplift protection : 88322.1000

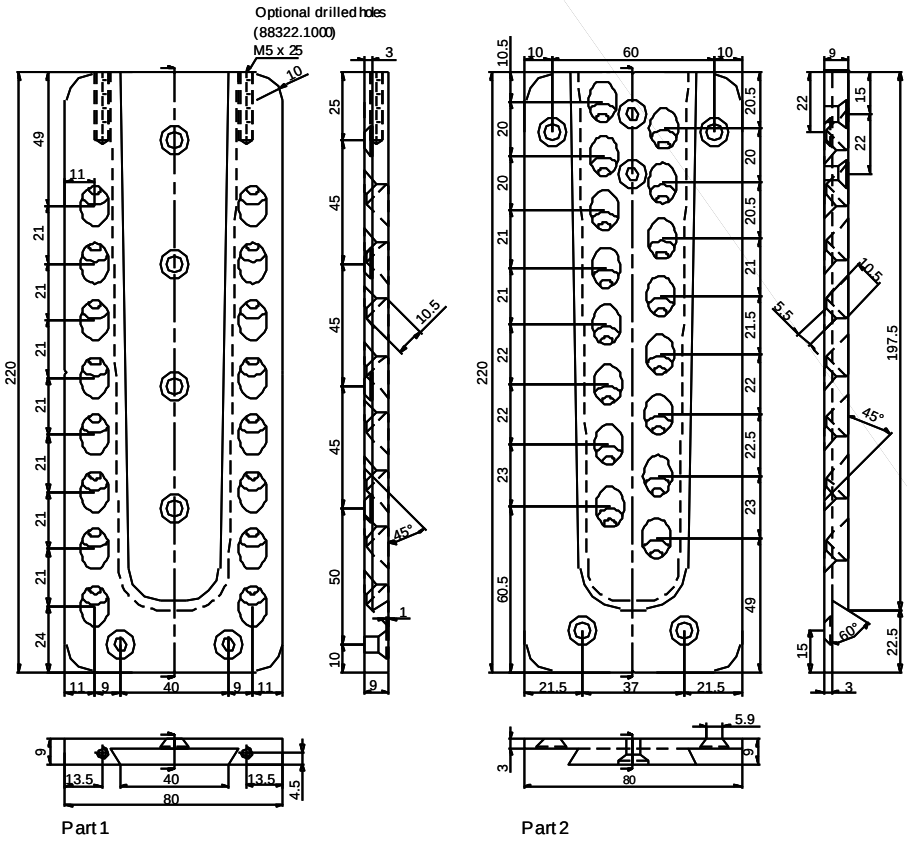

HVP connector 88420.0000 (120 x 200 x 20 mm)

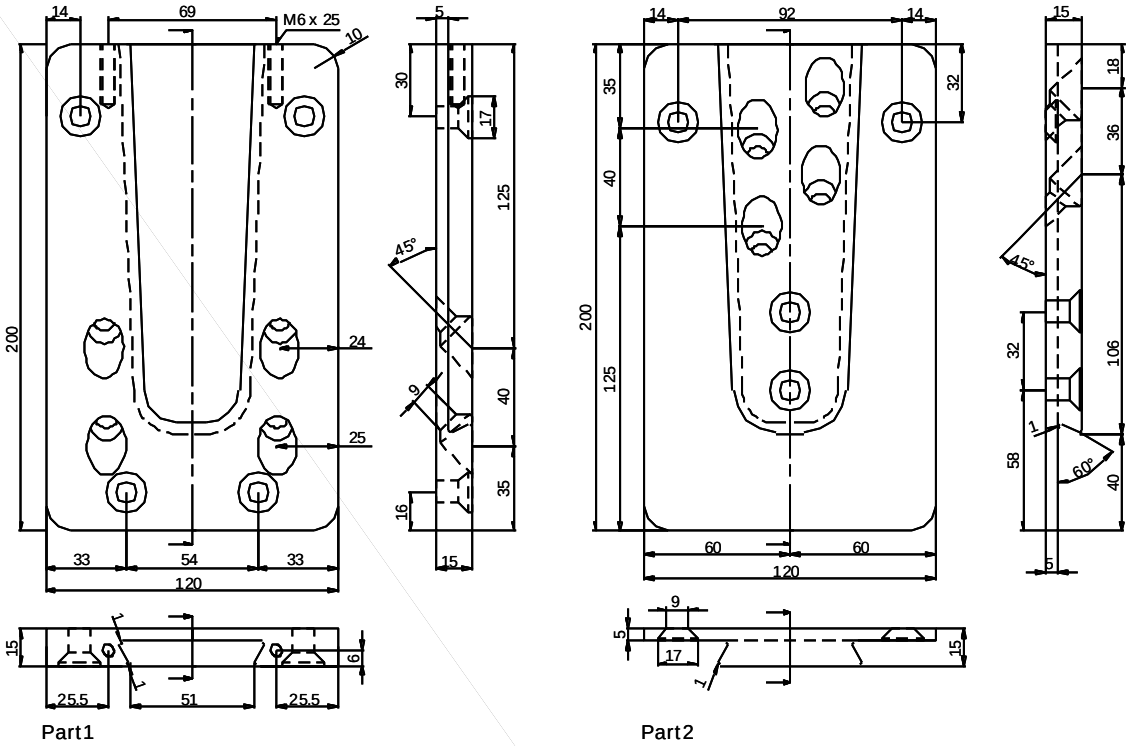

HVP connector 88425.0000 (120 x 250 x 20 mm)

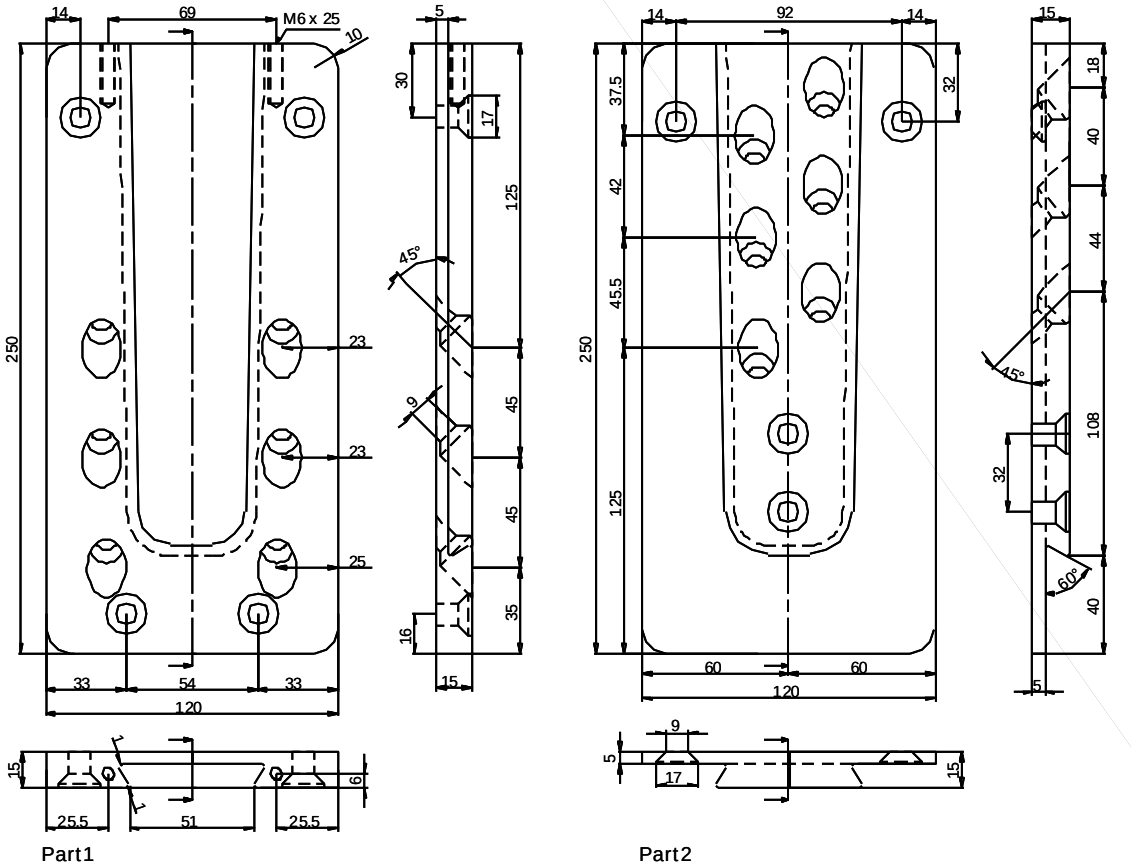

HVP connector 88430.0000 (120 x 300 x 20 mm)

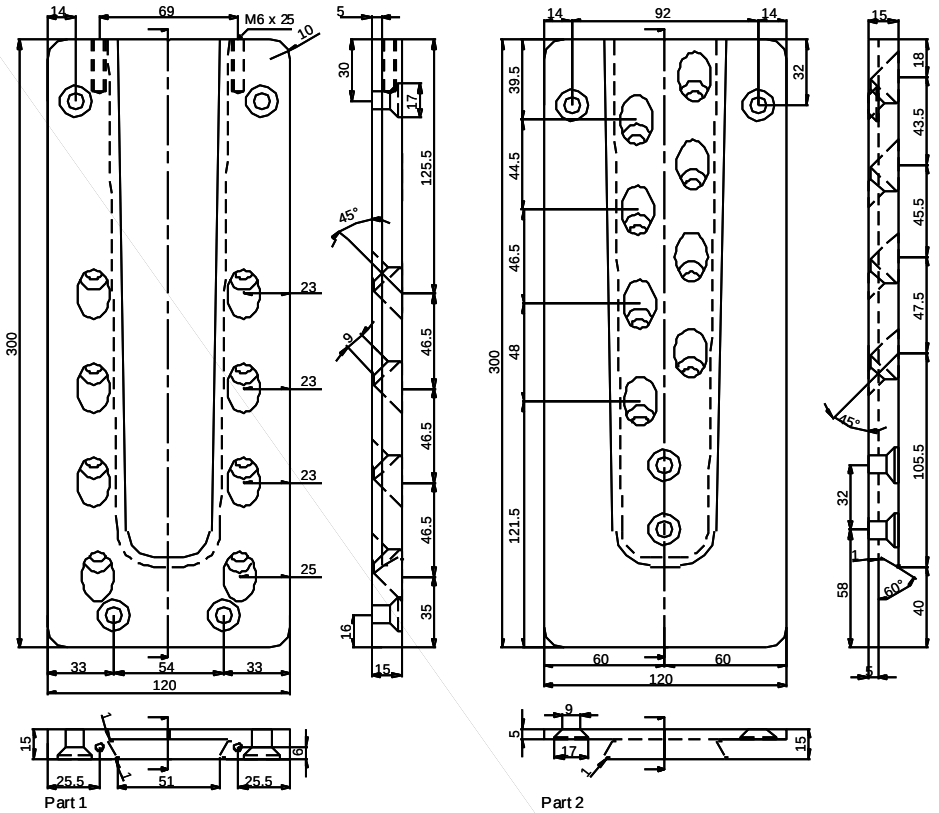

HVP connector 88435.0000 (120 x 350 x 20 mm)

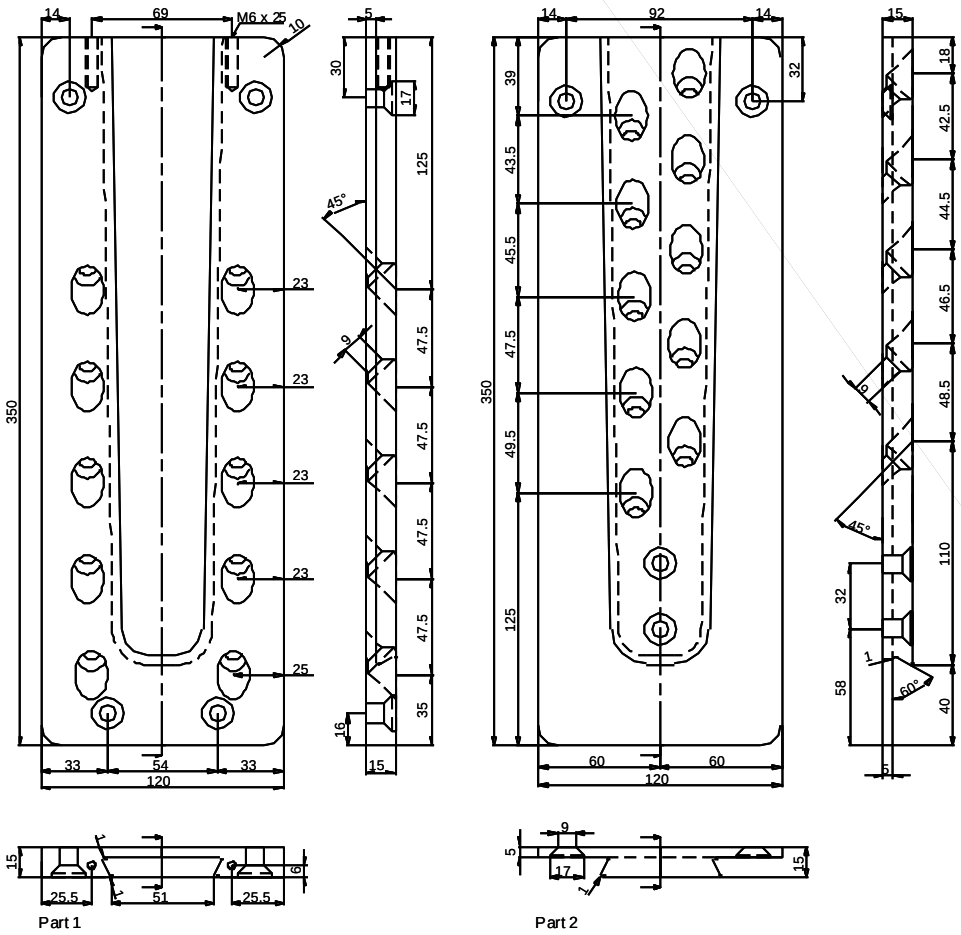

HVP connector 88440.0000 (120 x 400 x 20 mm)

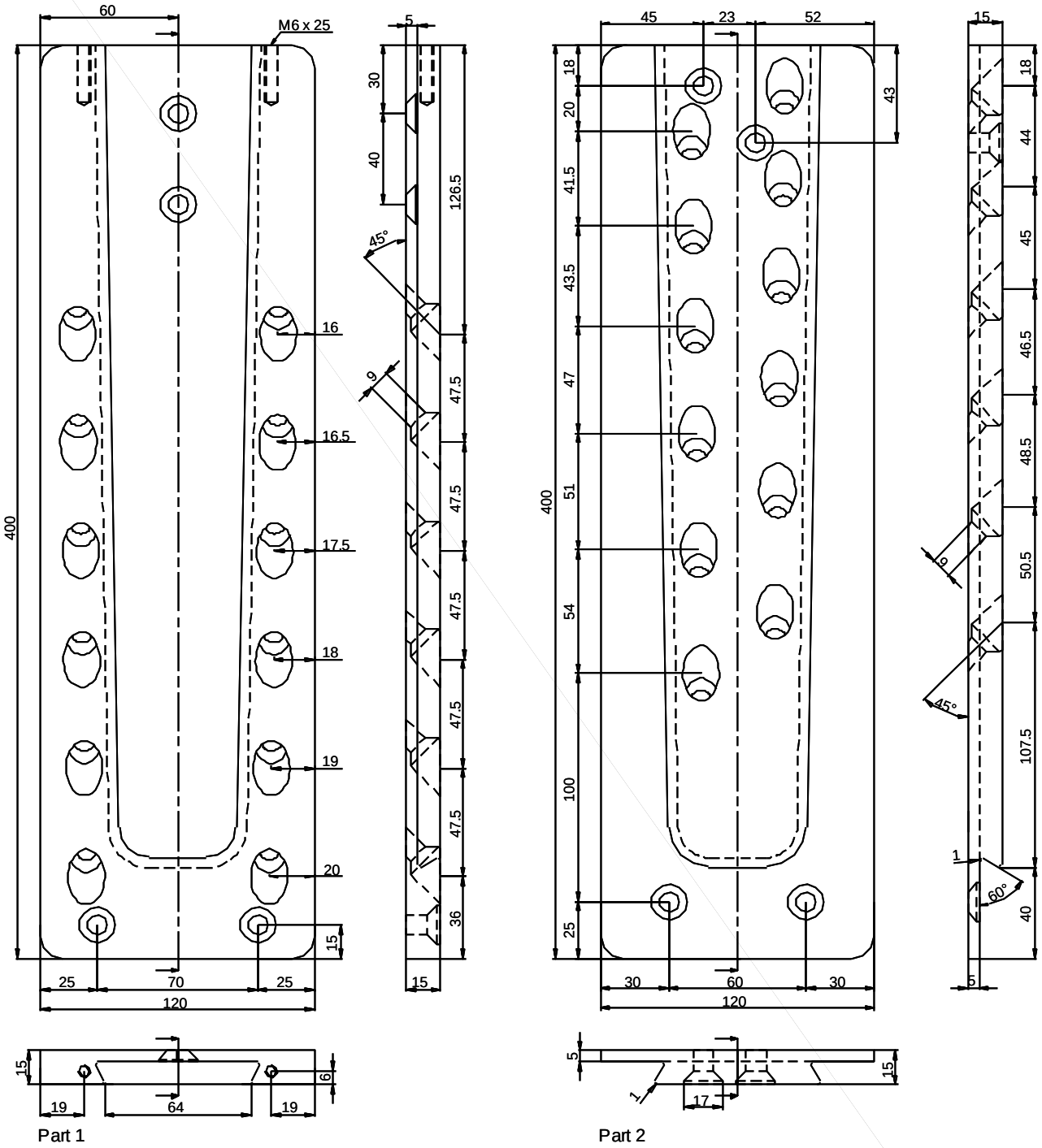

HVP connector 88445.0000 (120 x 450 x 20 mm)

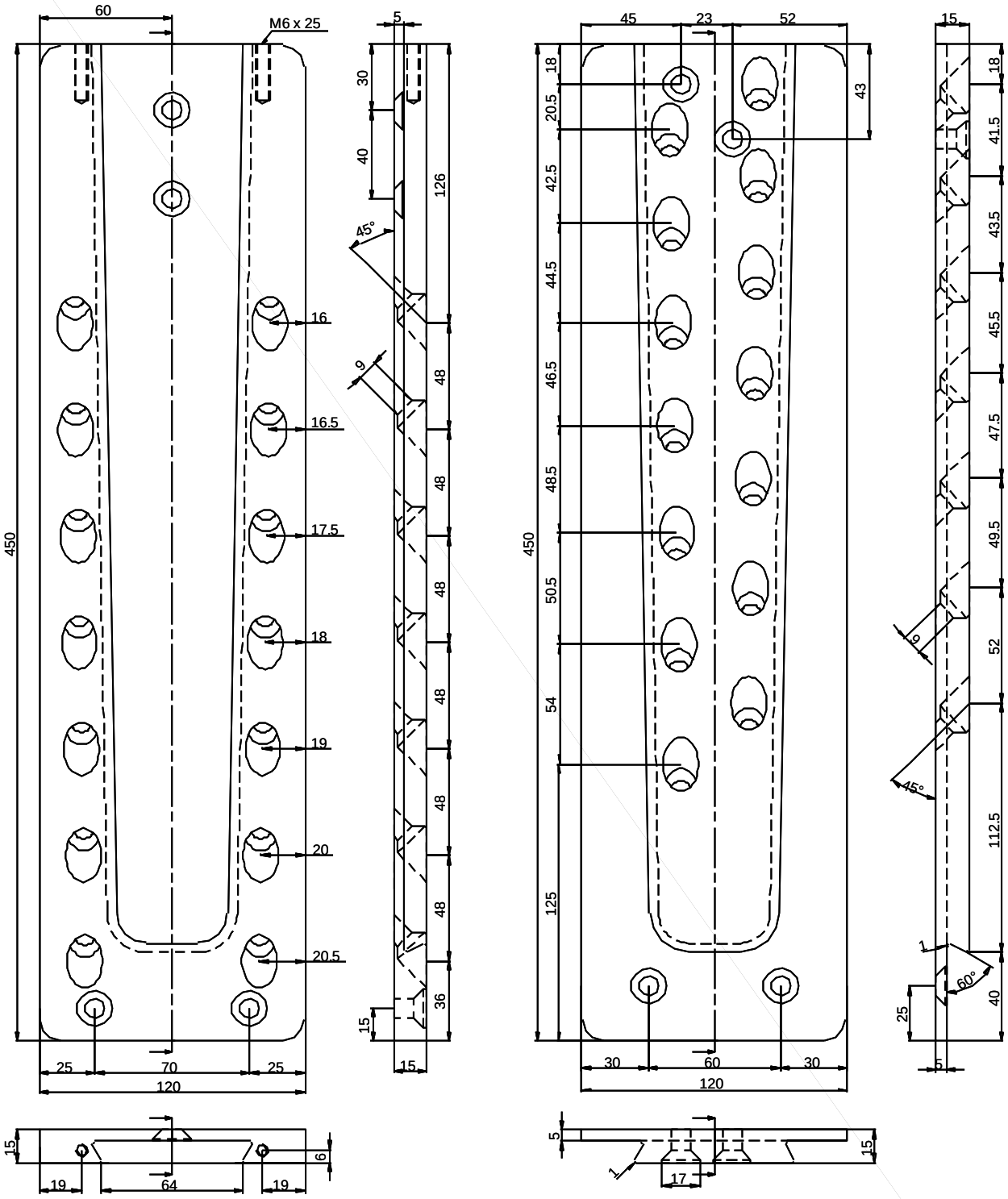

HVP connector 88450.0000 (120 x 500 x 20 mm)

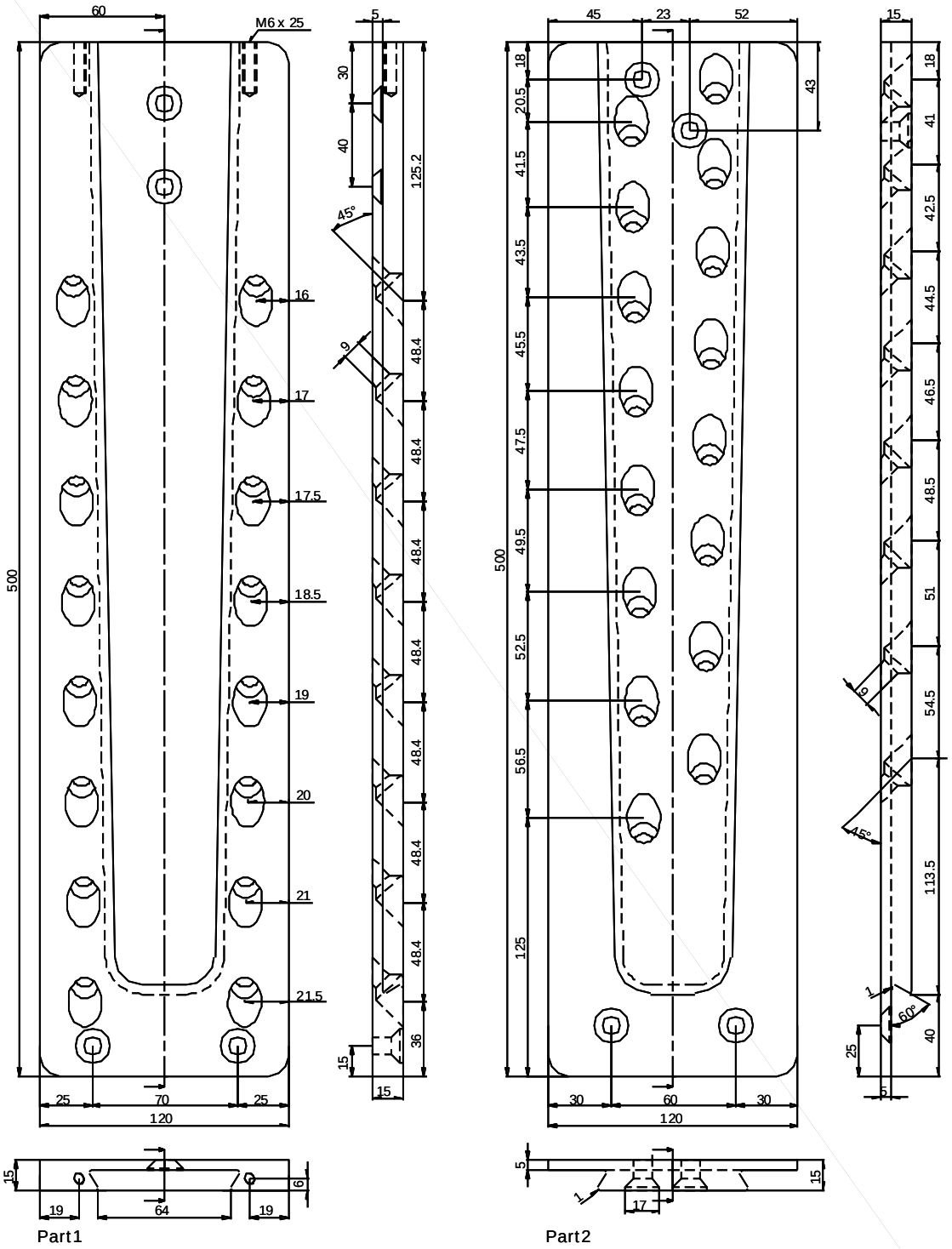

HVP connector 88455.0000 (120 x 550 x 20 mm)

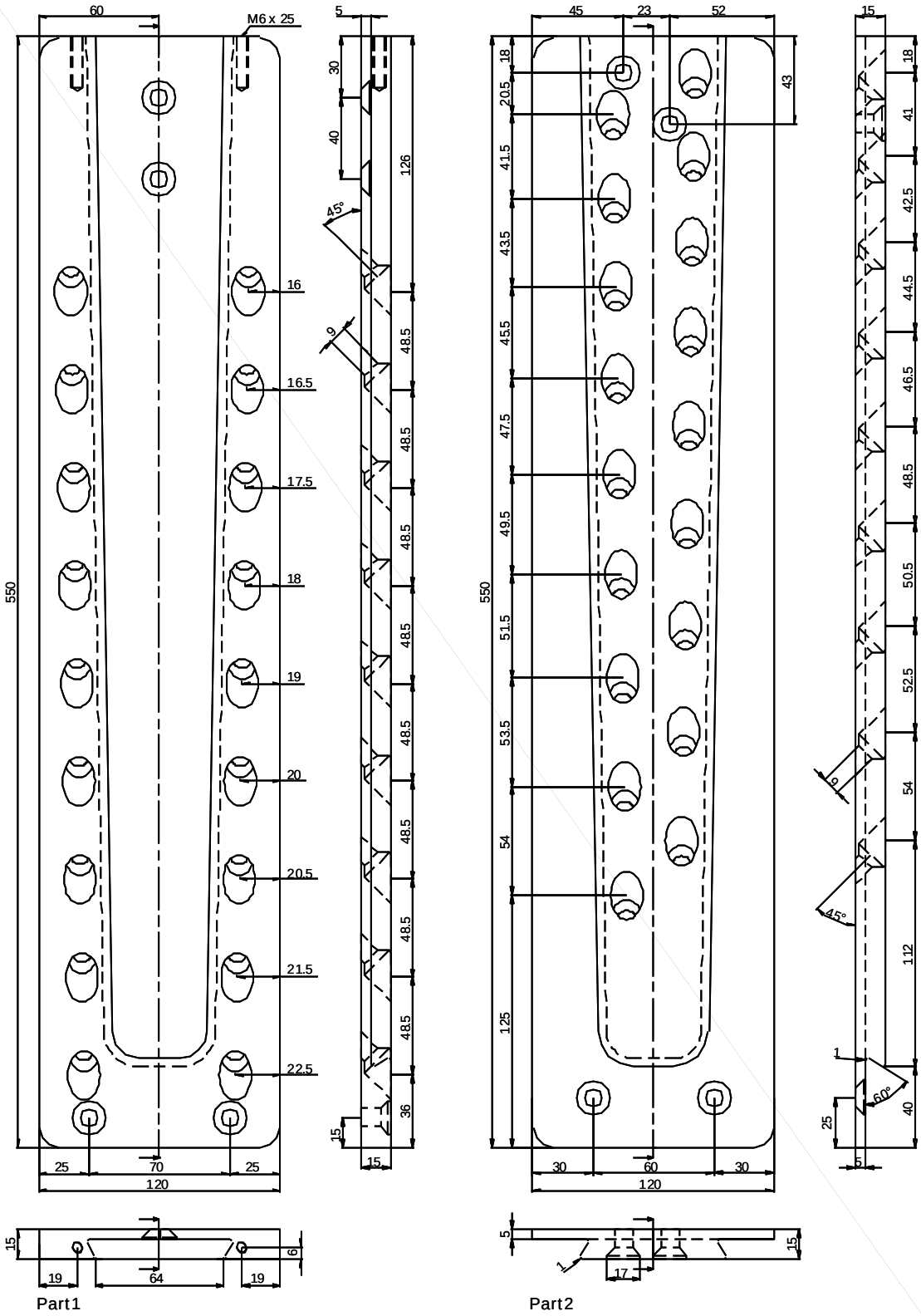

HVP connector 88460.0000 (120 x 600 x 20 mm)

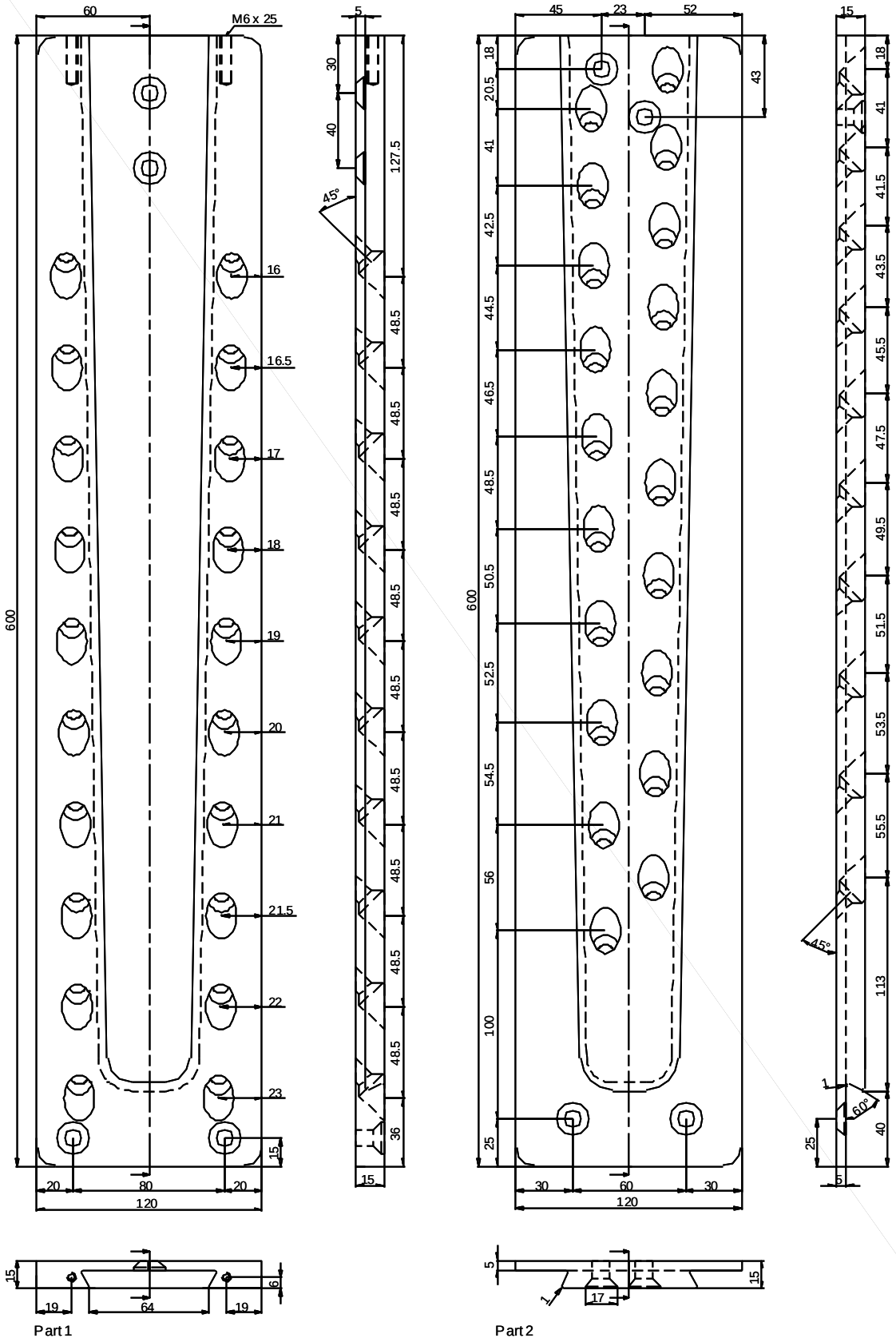

Part 1

Part 2

HVP connector 88540.0000 (140 x 400 x 20 mm)

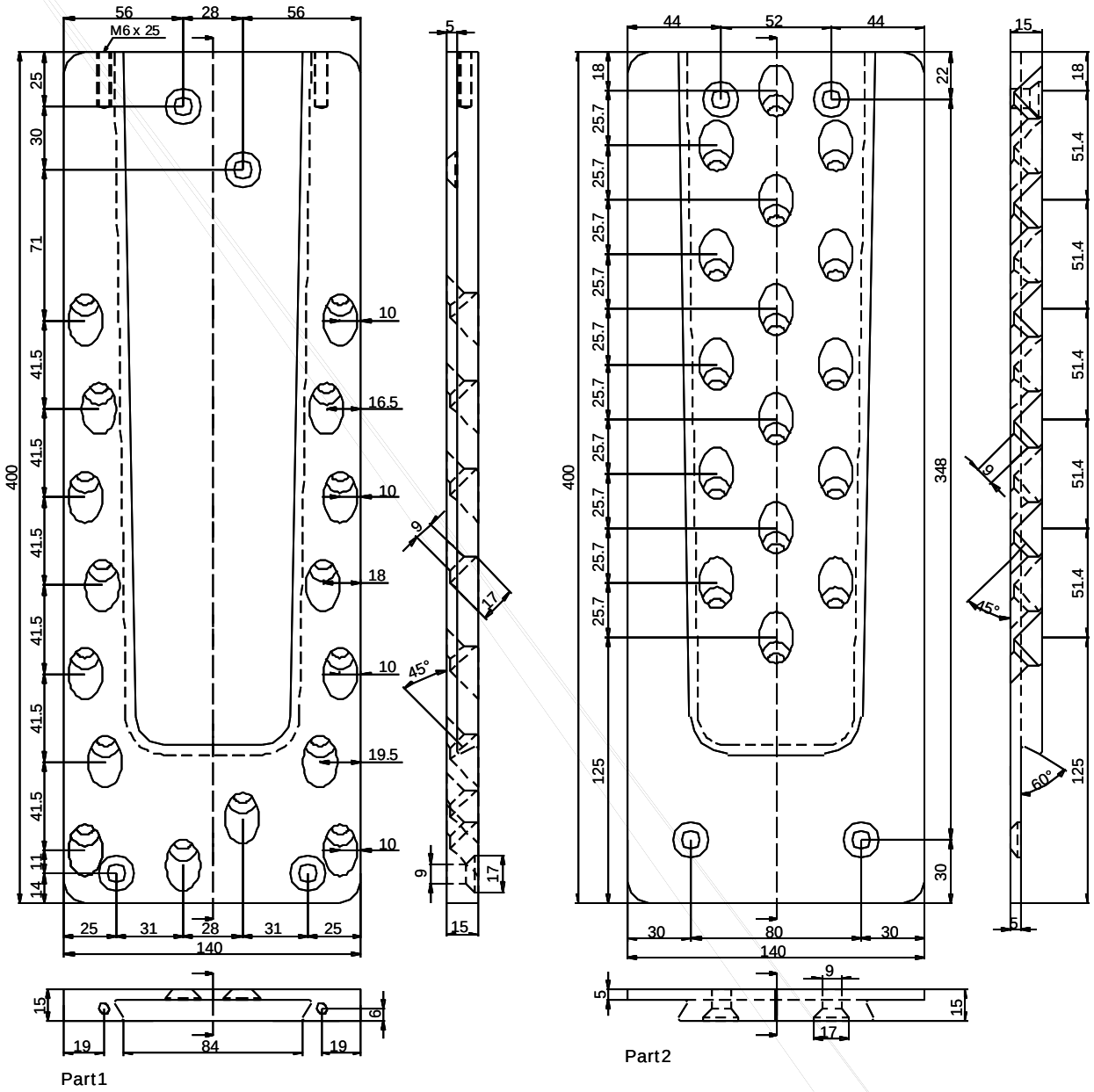

HVP connector 88545.0000 (140 x 450 x 20 mm)

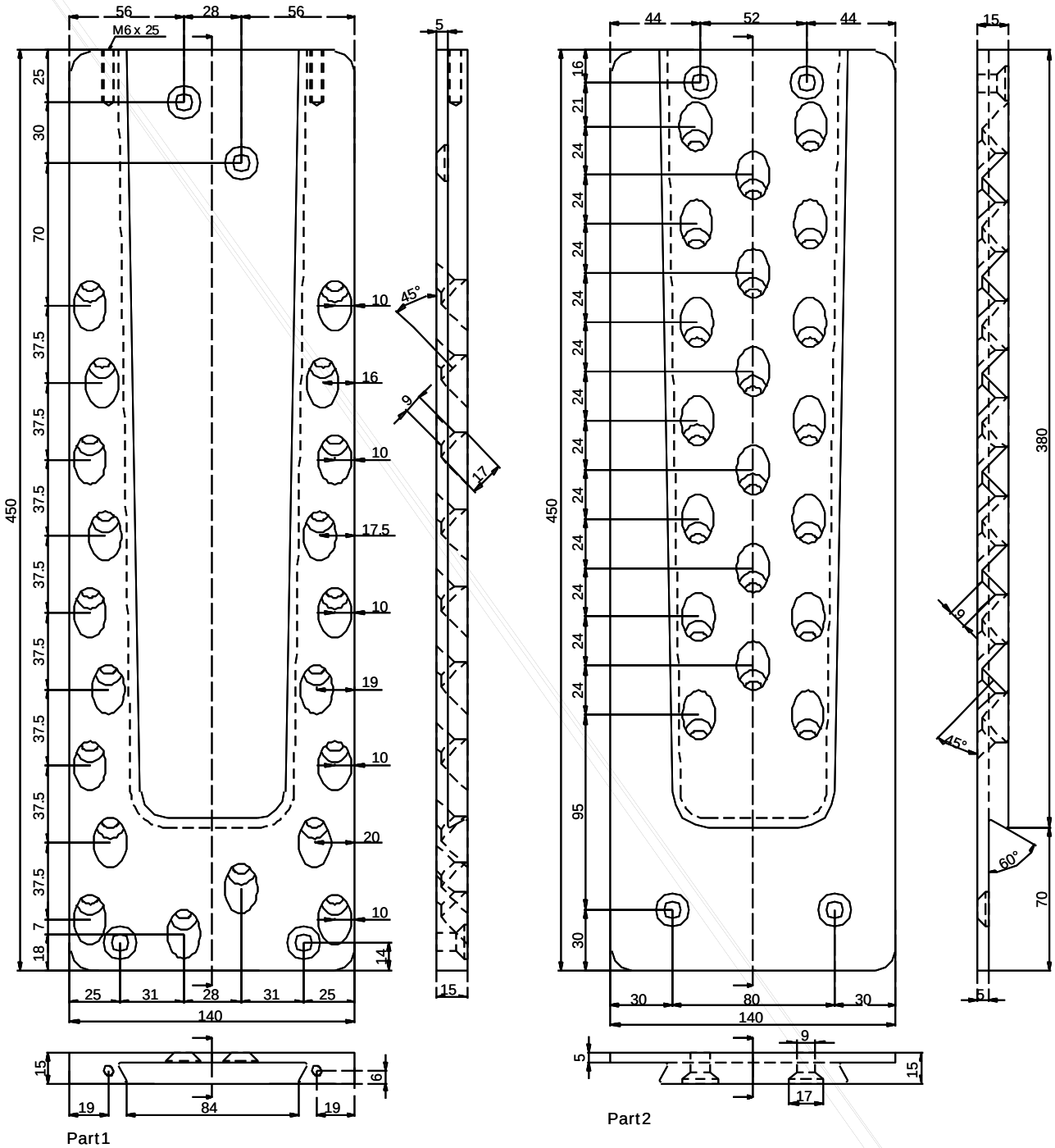

HVP connector 88550.0000 (140 x 500 x 20 mm)

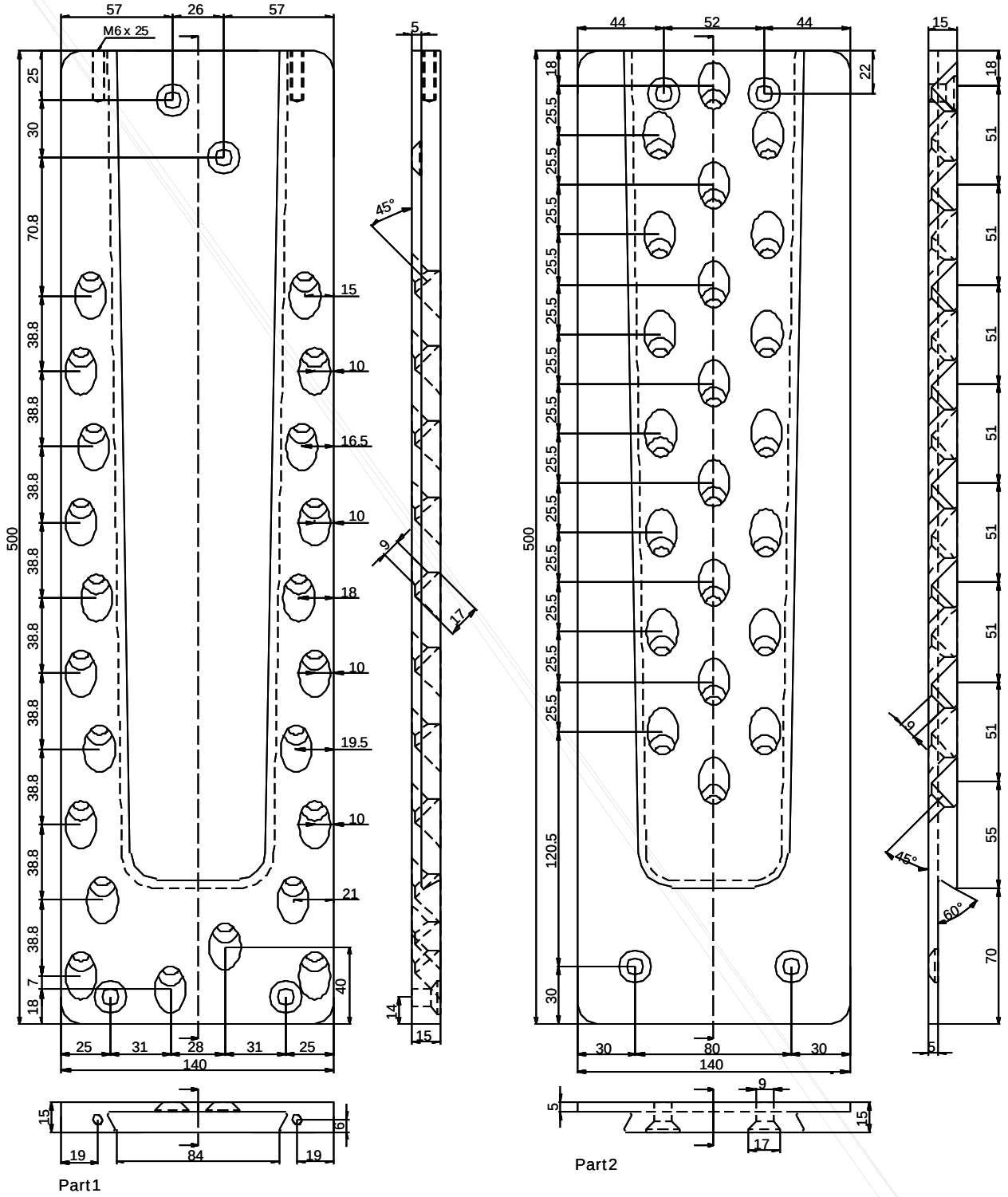

HVP connector 88555.0000 (140 x 550 x 20 mm)

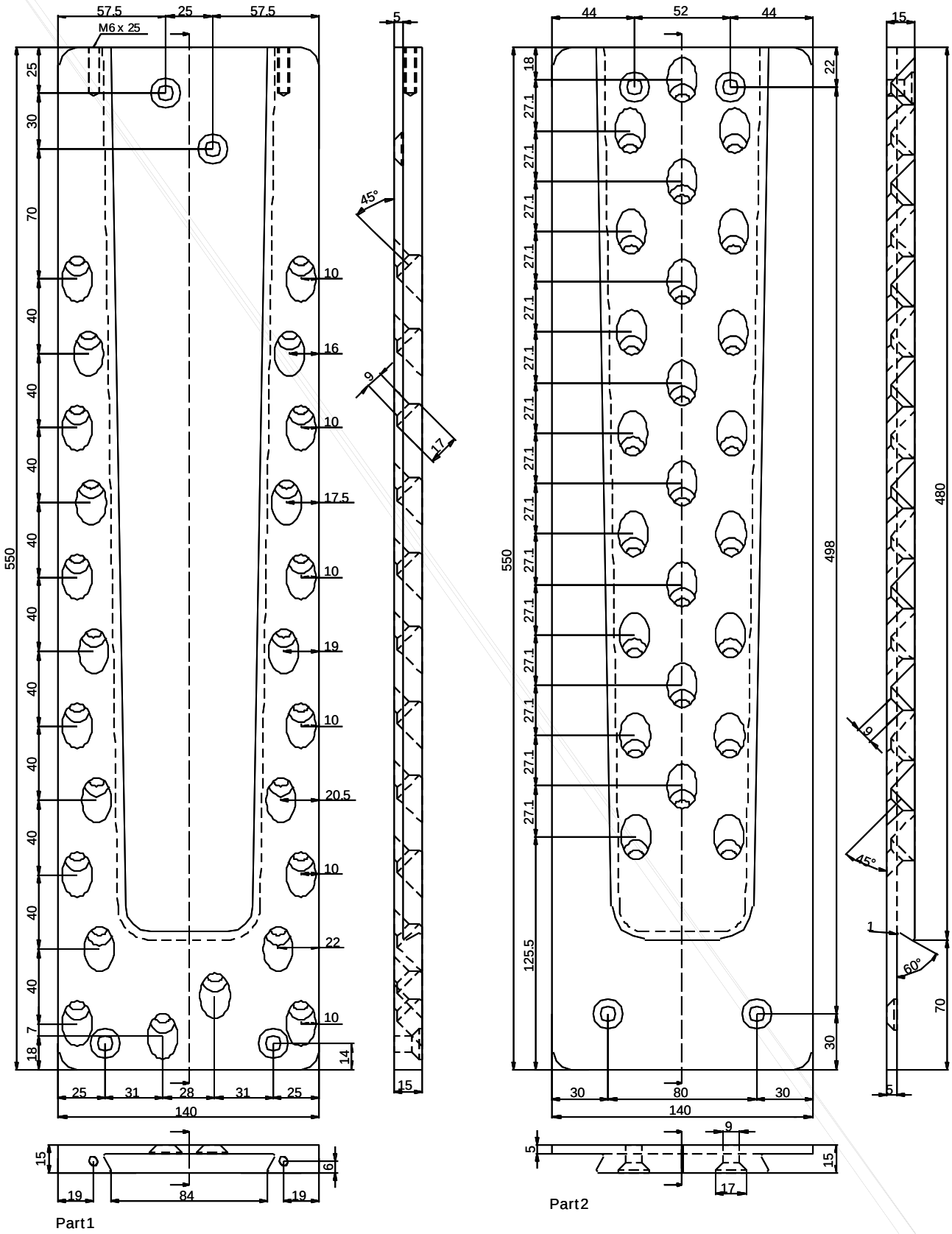

HVP connector 88560.0000 (140 x 600 x 20 mm)

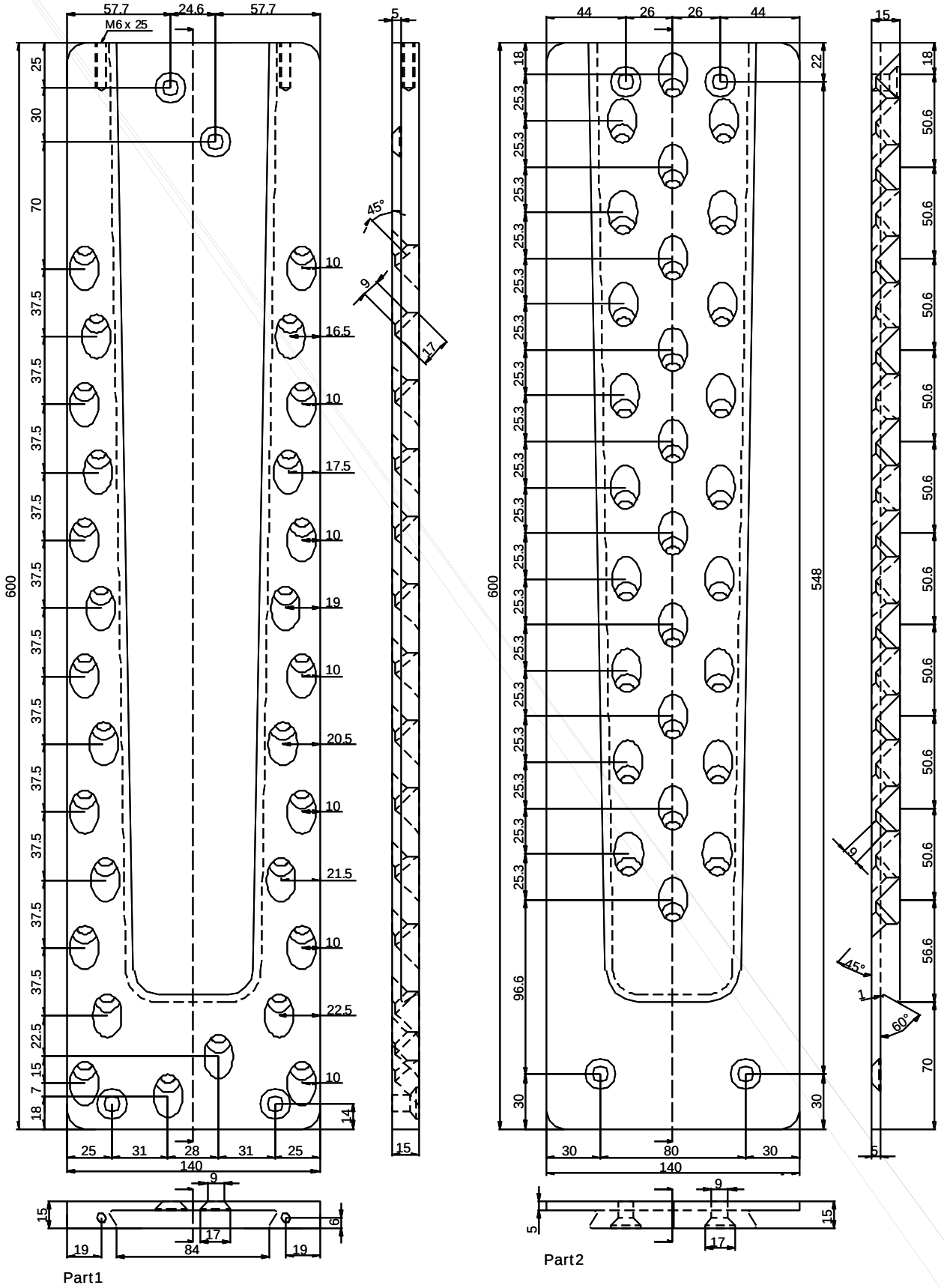

HVP connector 88210.2000 (120 x 100 x 12 mm)

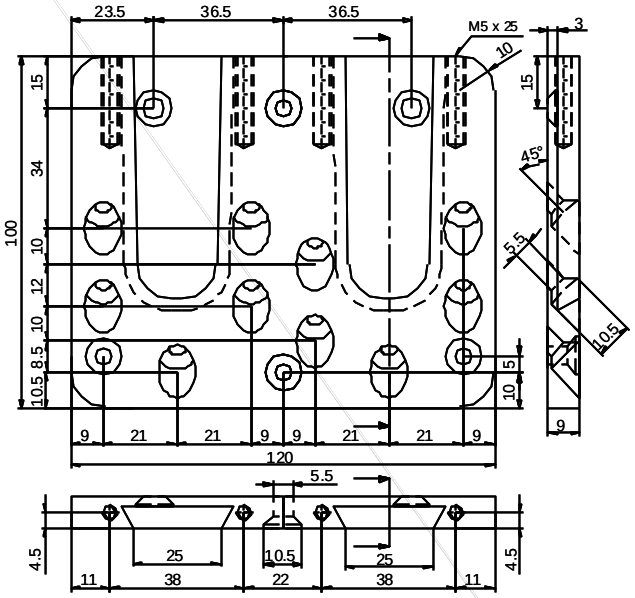

Part 1

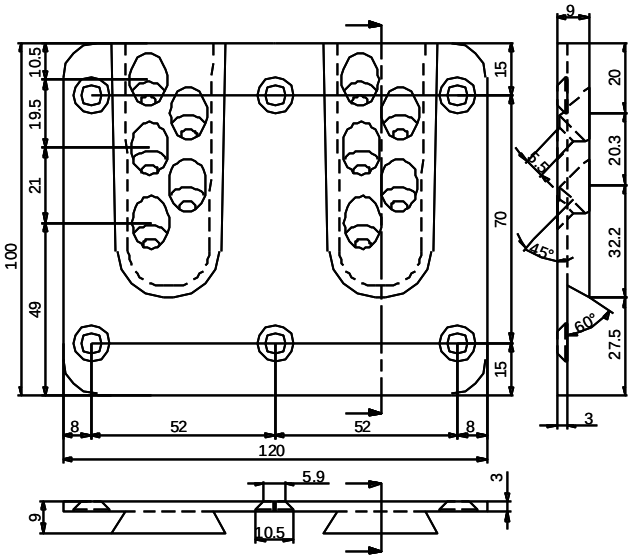

Part 2

HVP connector 88214.2000 (120 x 140 x 12 mm)

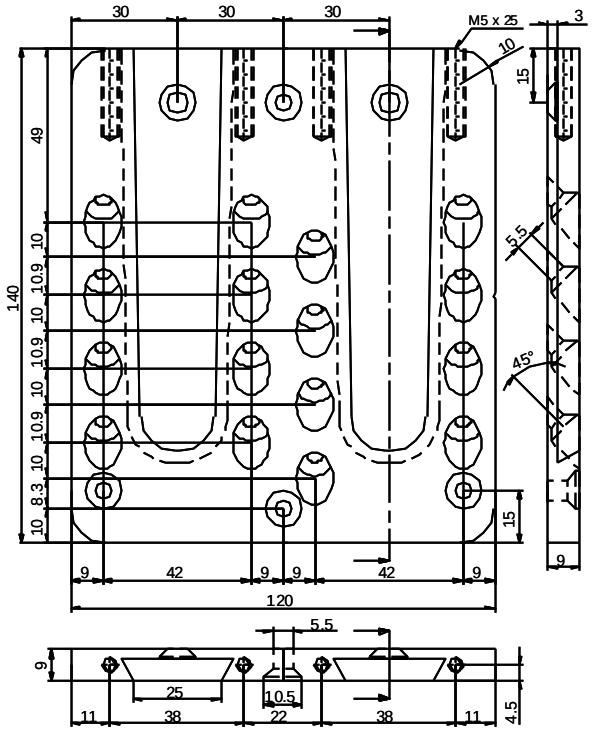

Part 1

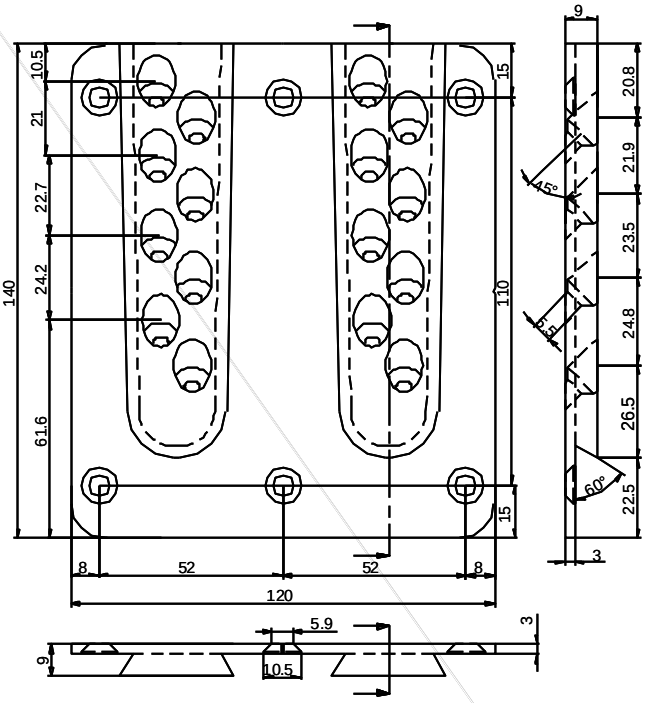

Part 2

HVP connector 88318.2000 (160 x 180 x 12 mm)

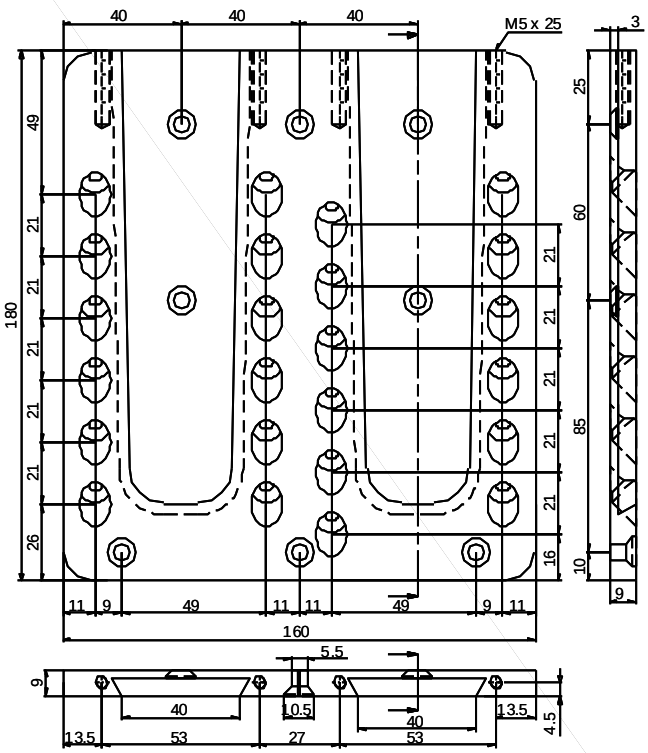

Part1

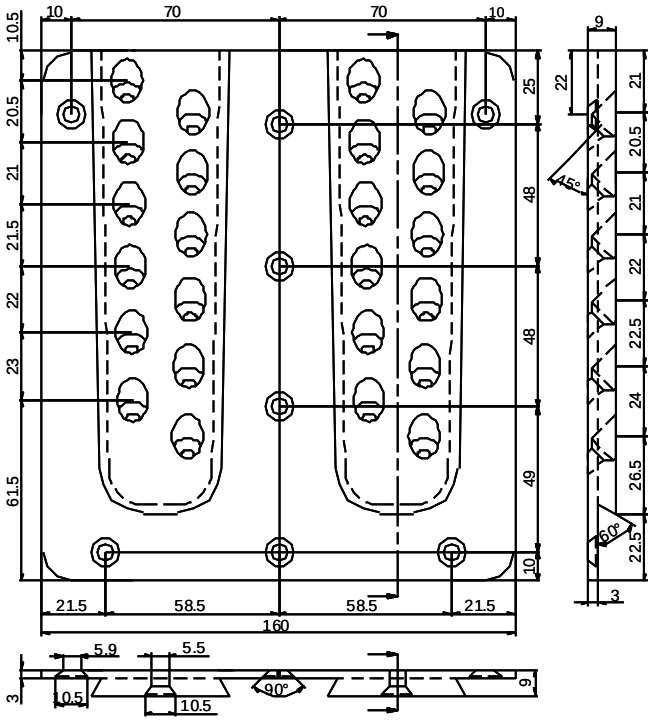

Part2

HVP connector 88322.2000 (160 x 220 x 12 mm)

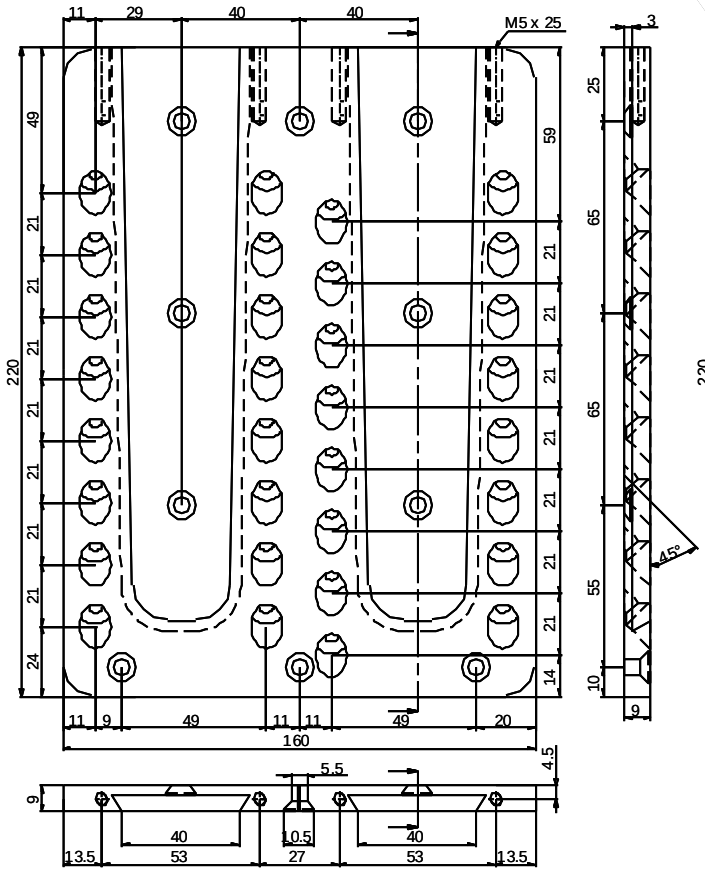

Part1

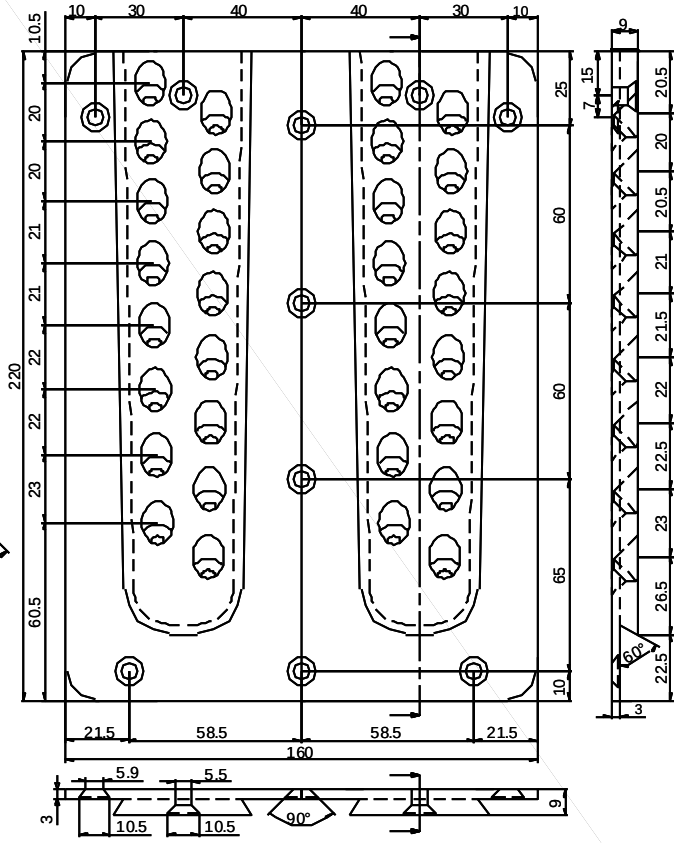

Part2

HVP connector 88420.2000 (240 x 200 x 20 mm)

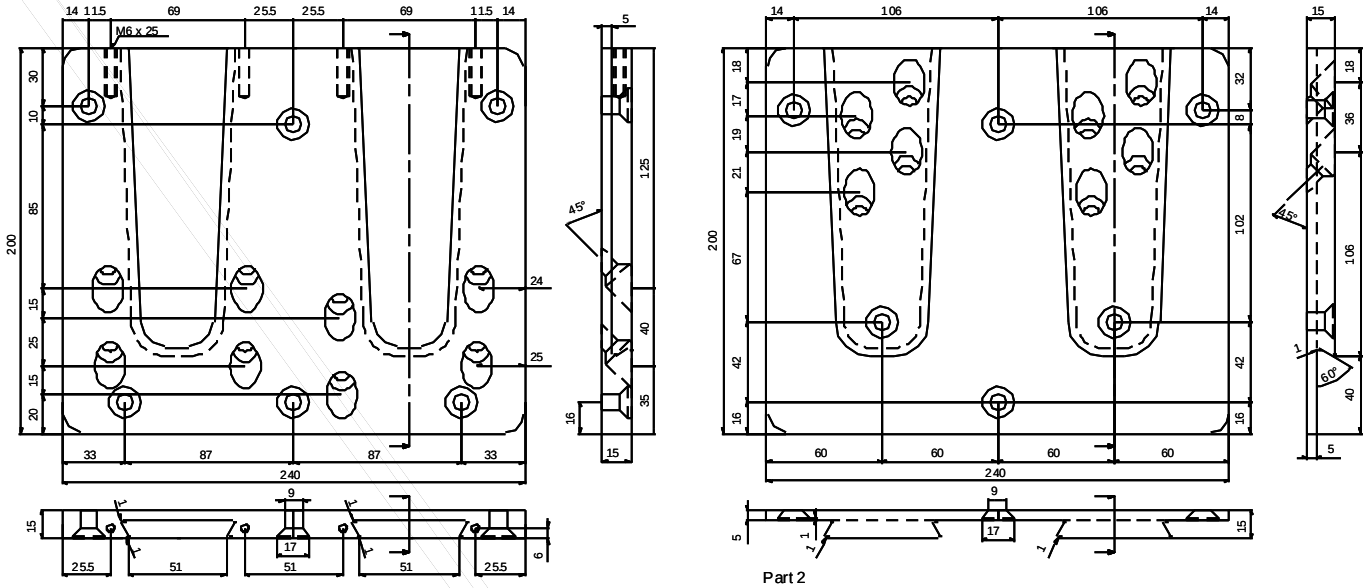

HVP connector 88425.2000 (240 x 250 x 20 mm)

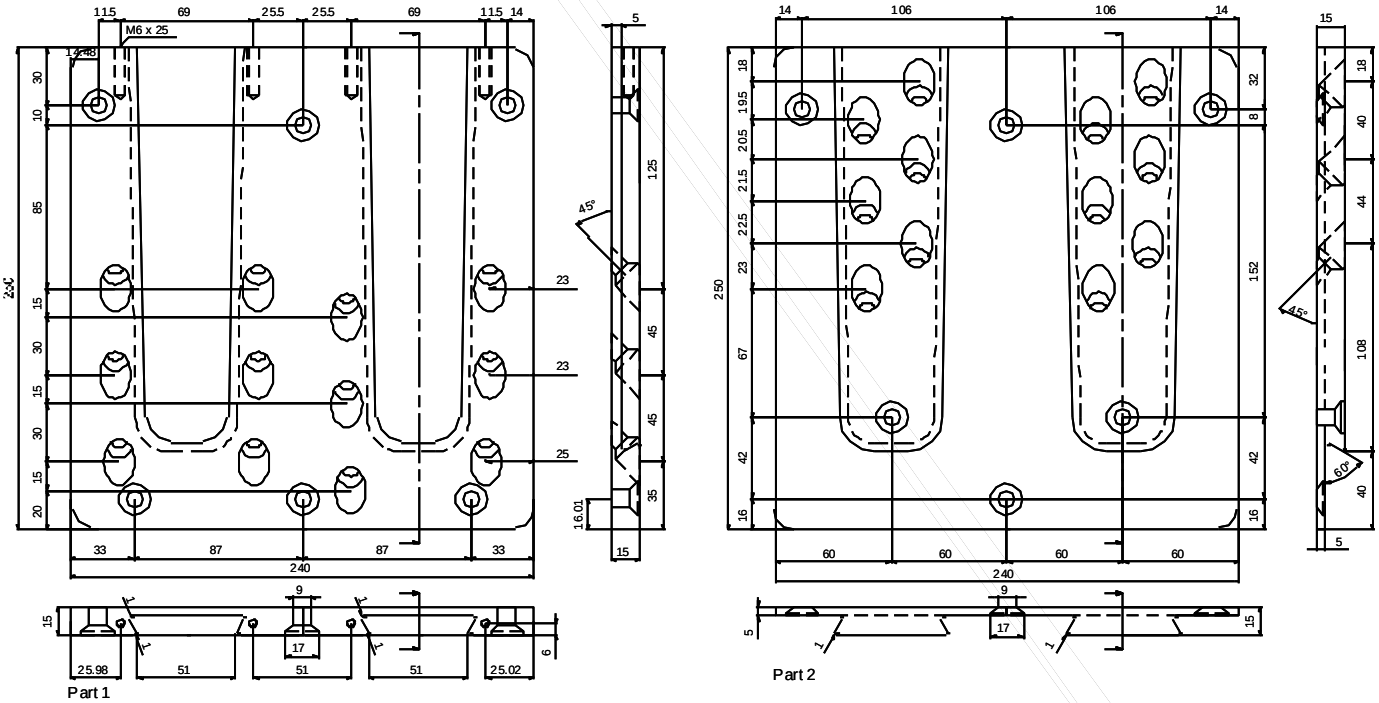

HVP connector 884302000 (240 x 300 x 20 mm)

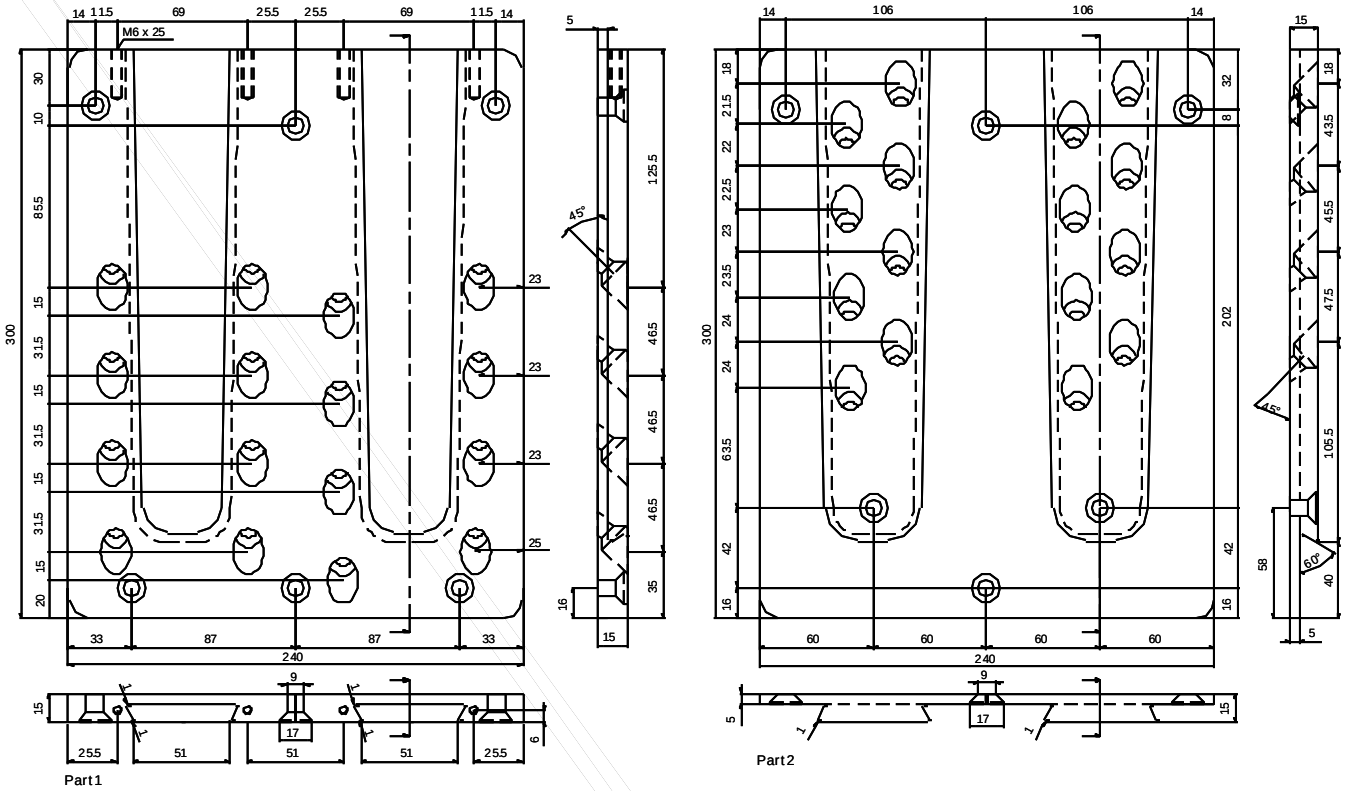

HVP connector 884352000 (240 x 350 x 20 mm)

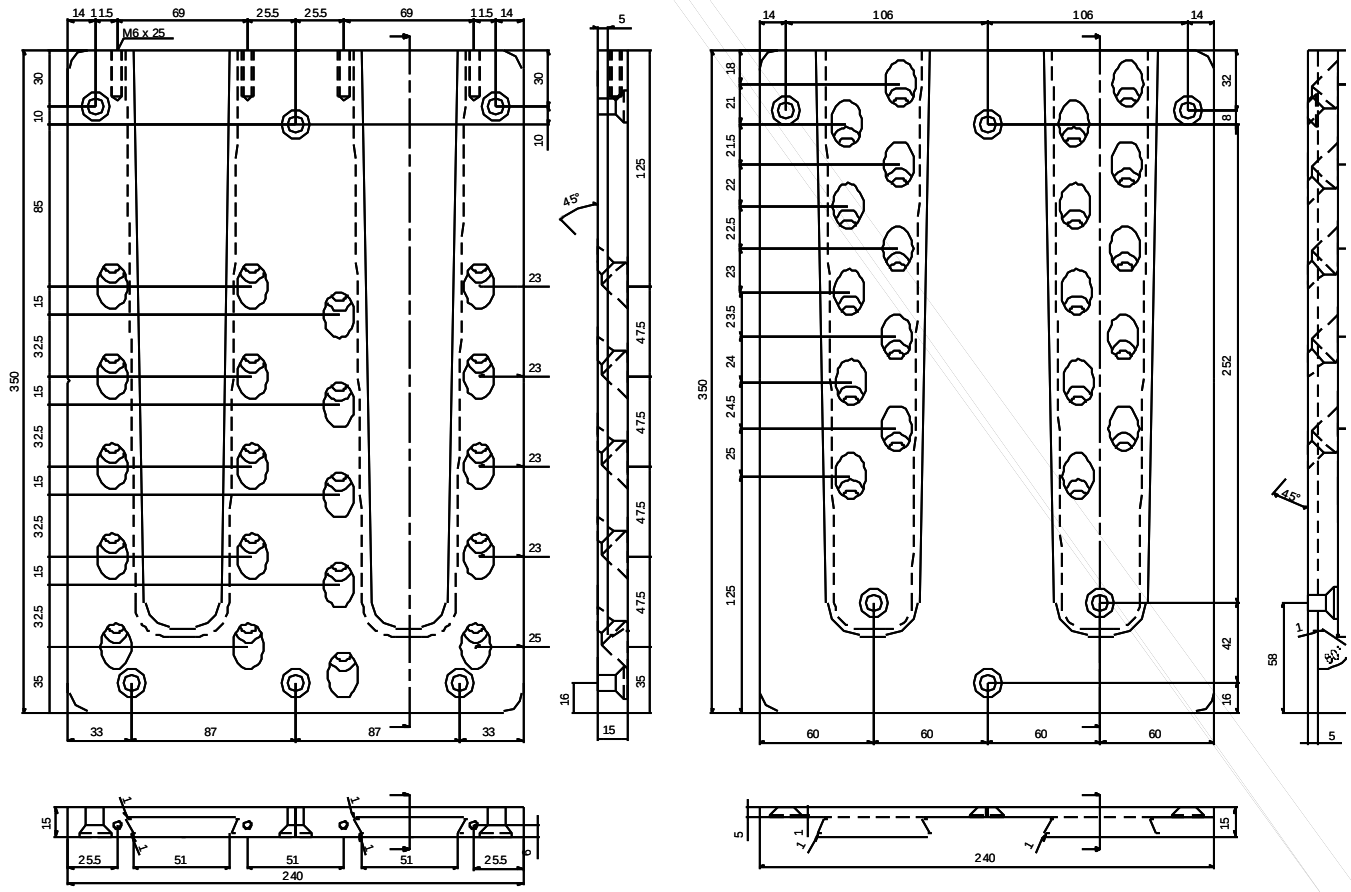

HVP connector 88440.2000 (240 x 400 x 20 mm)

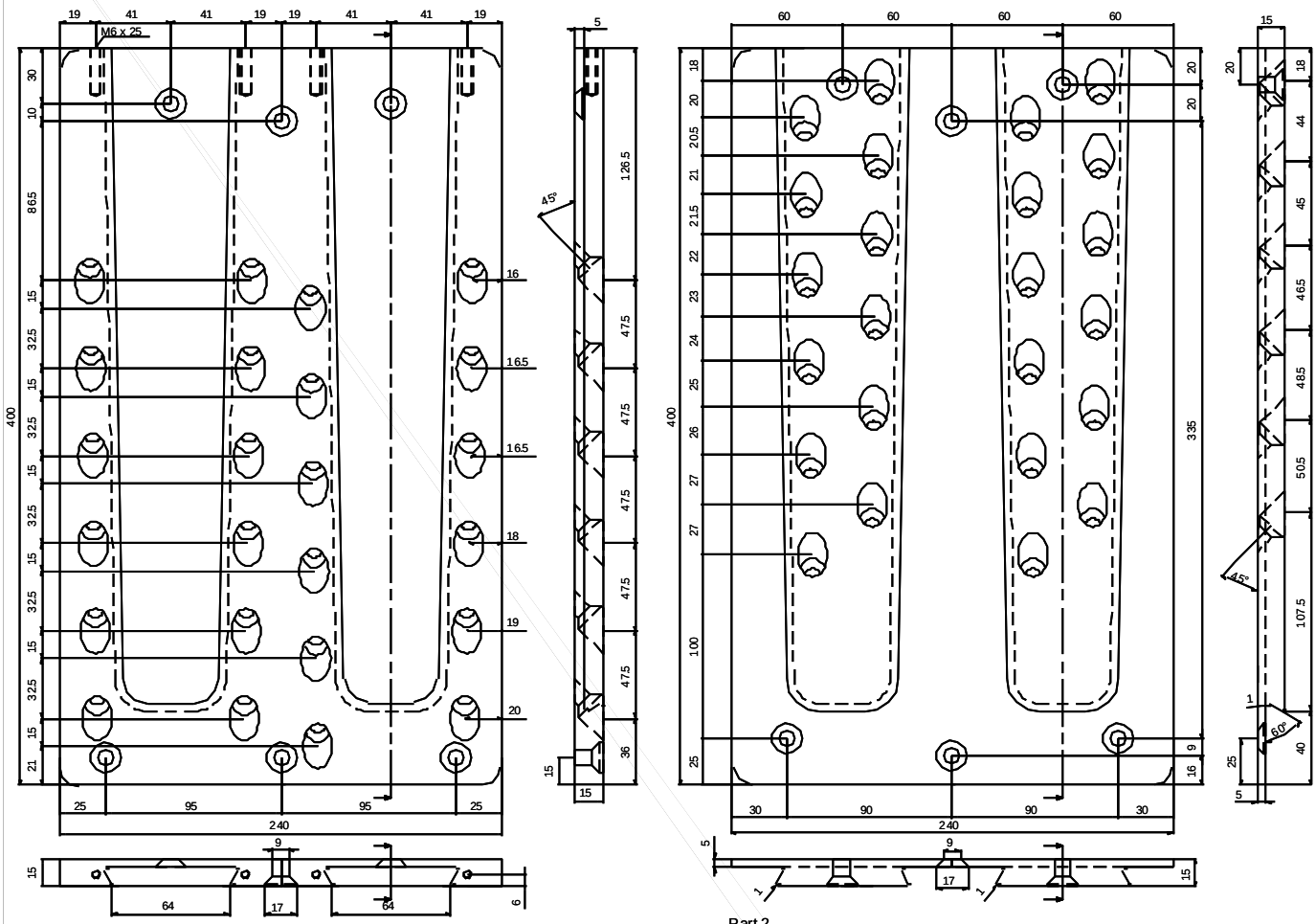

HVP connector 88445.2000 (240 x 450 x 20 mm)

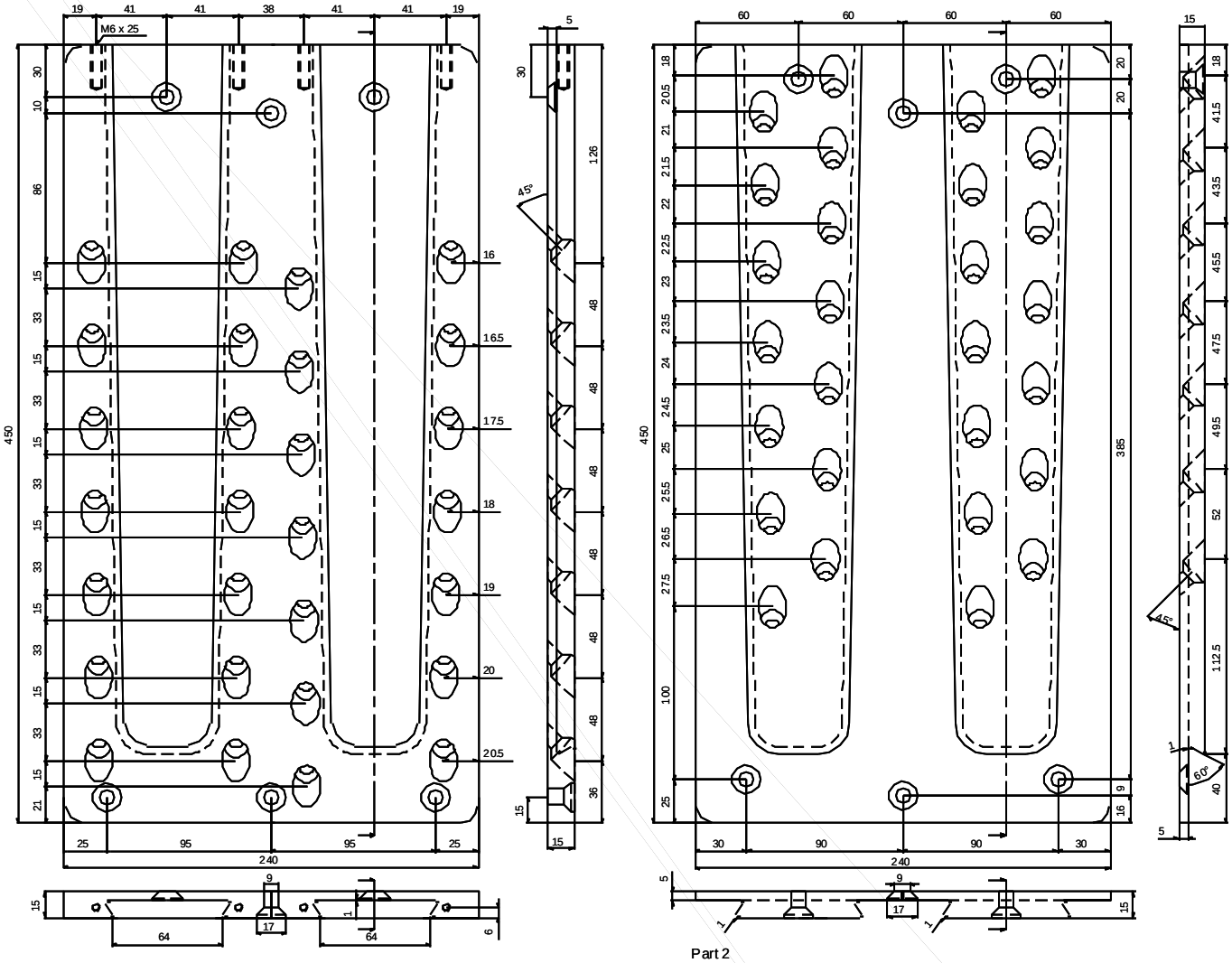

HVP connector 884502000 (240 x 500 x 20 mm)

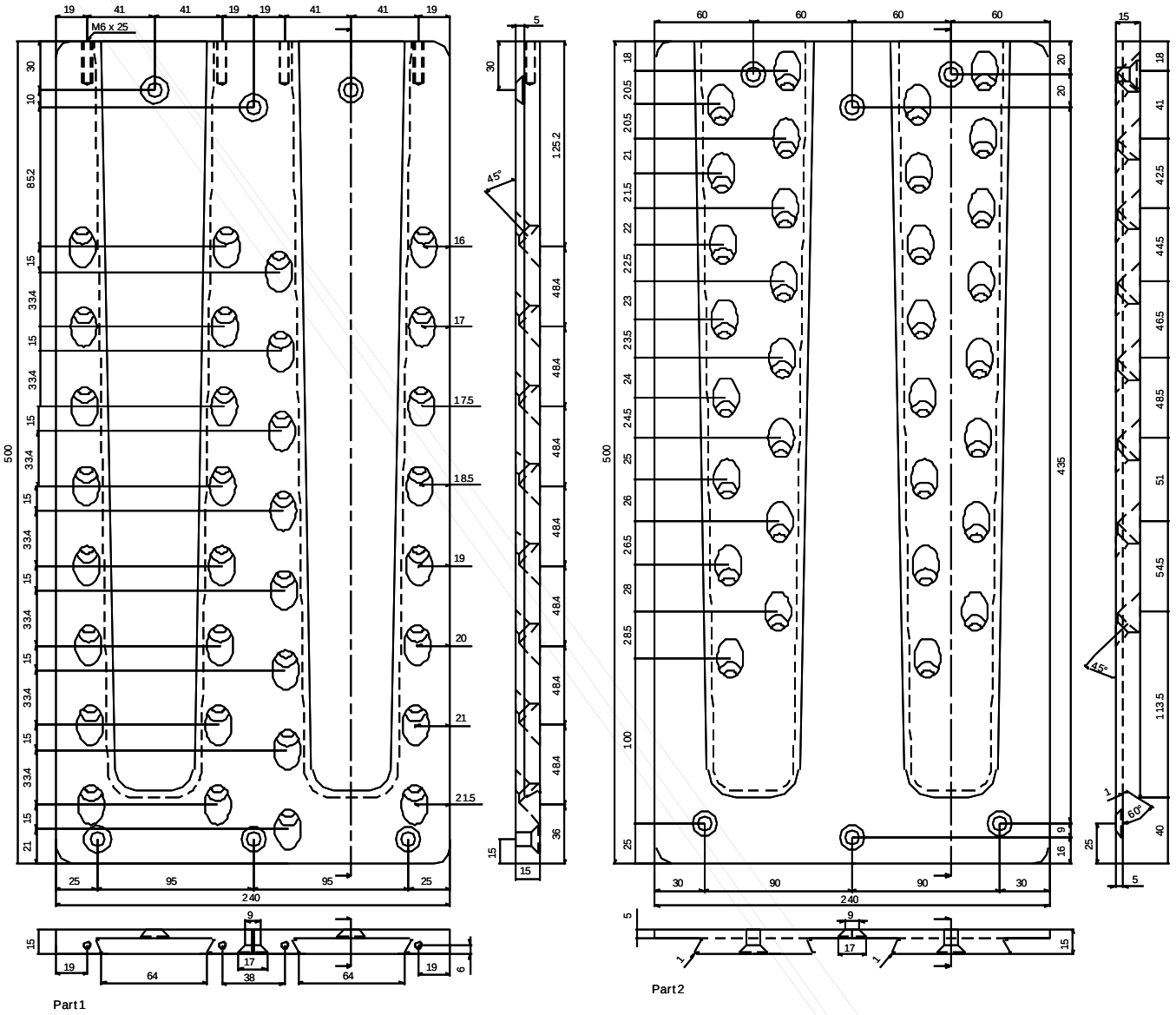

HVP connector 884552000 (240 x 550 x 20 mm)

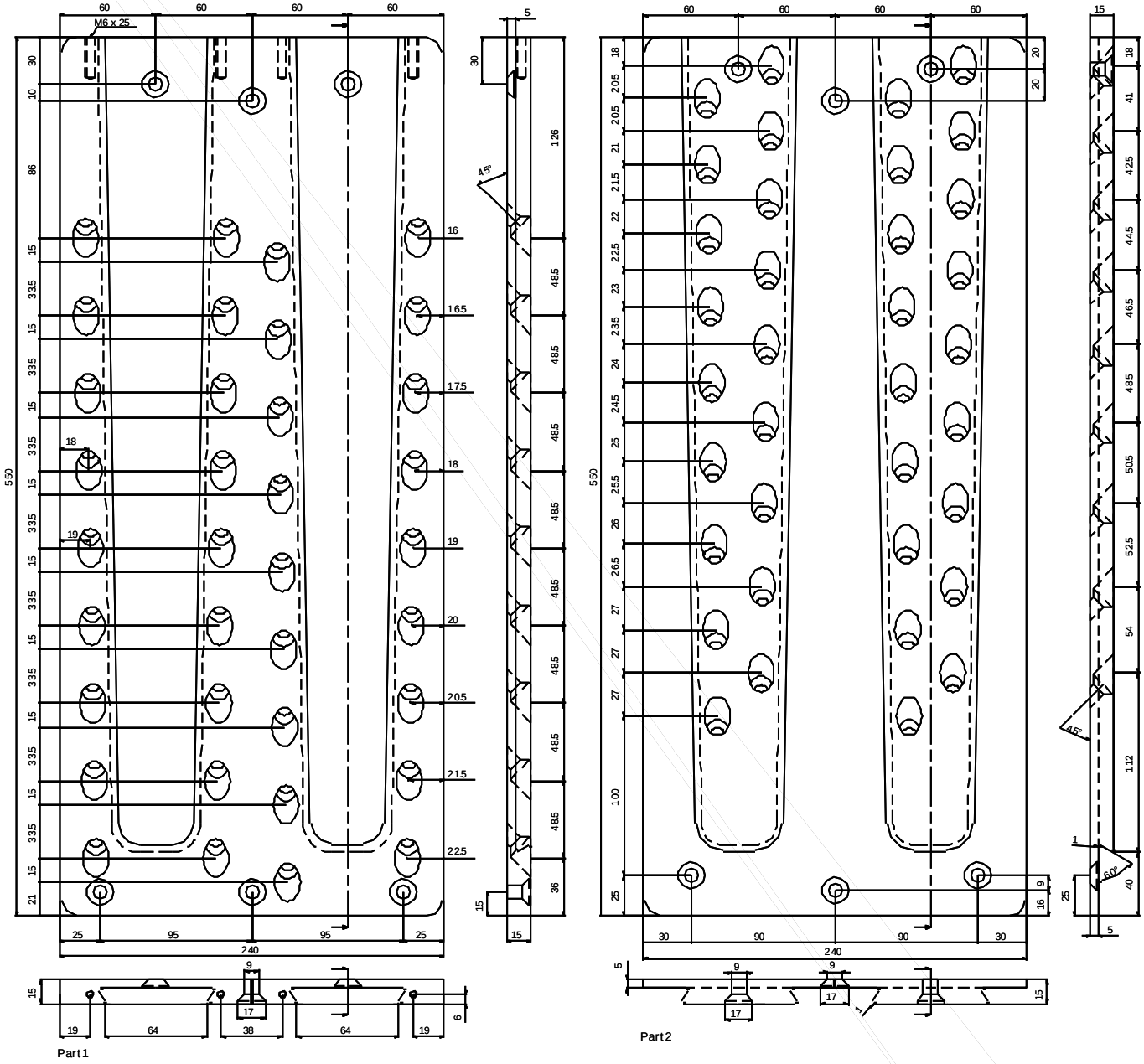

HVP connector 88460.2000 (240 x 600 x 20 mm)

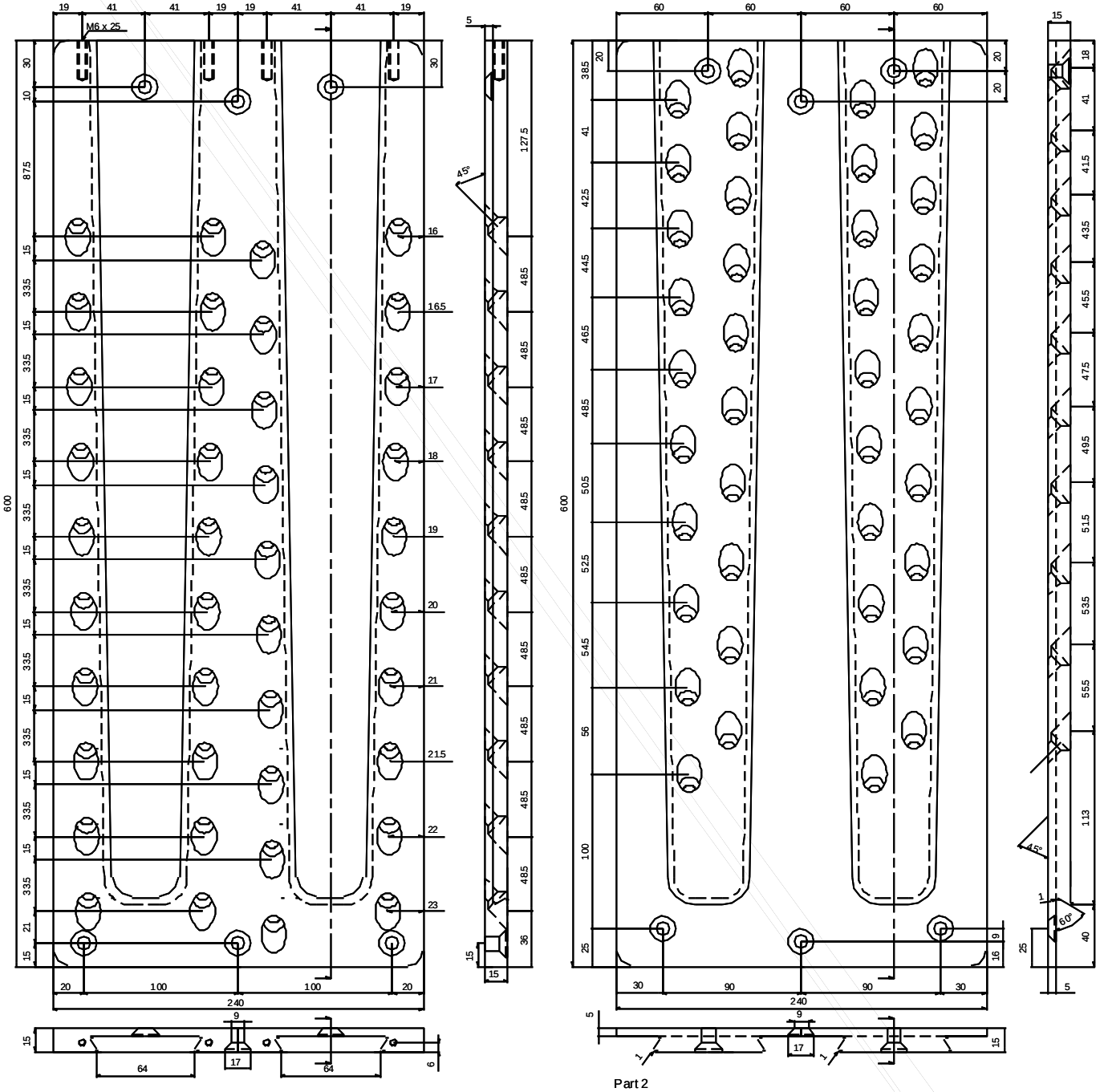

HVP connector 88420.0100 (100 x 200 x 20 mm)

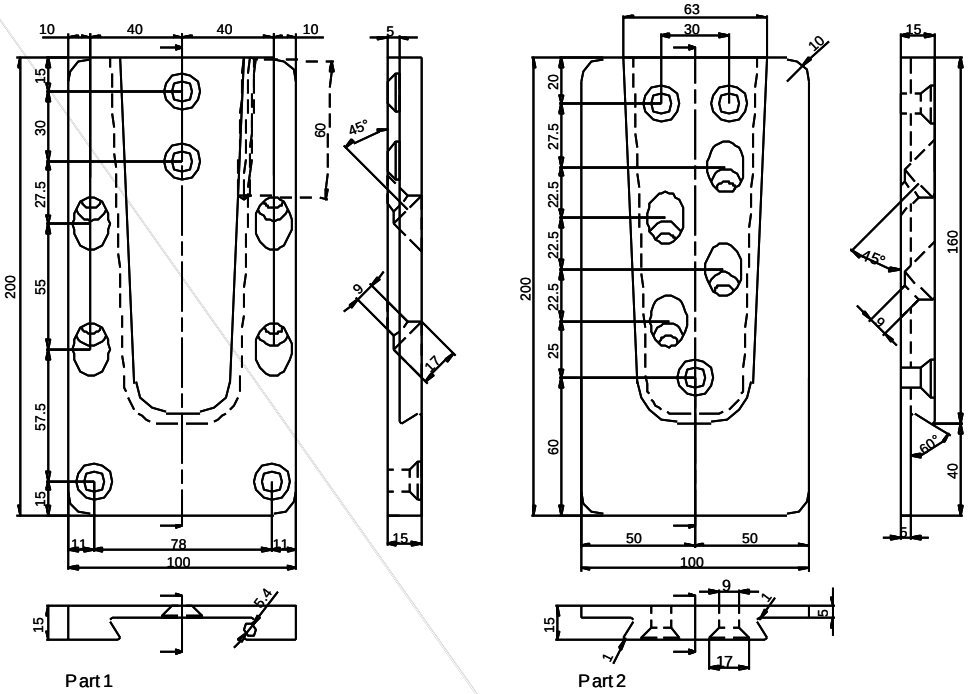

Part 1 Part 2

HVP connector 88425.0100 (100 x 250 x 20 mm)

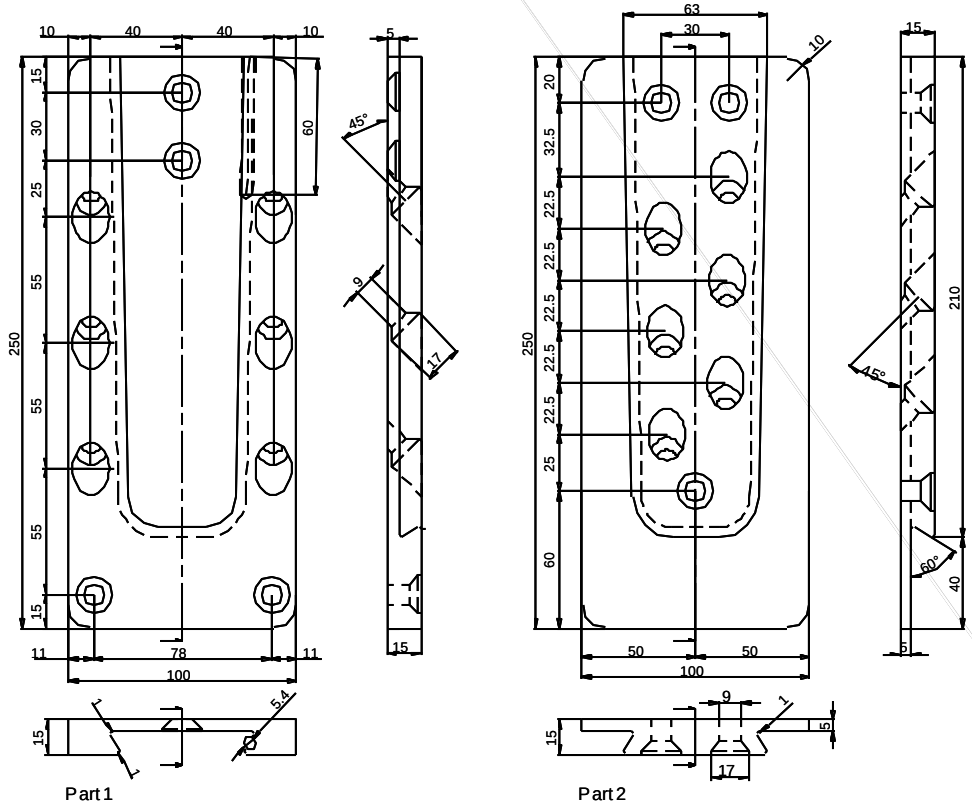

Part 1 Part 2

HVP connector 88430.0100 (100 x 300 x 20 mm)

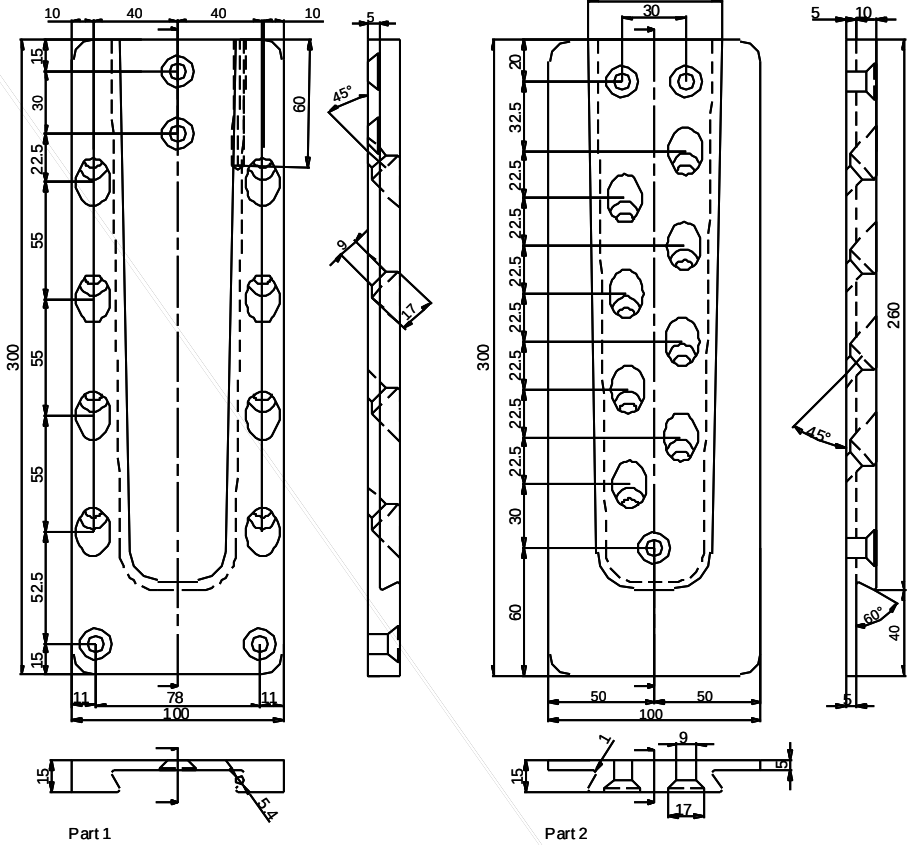

HVP connector 88435.0100 (100 x 350 x 20 mm)

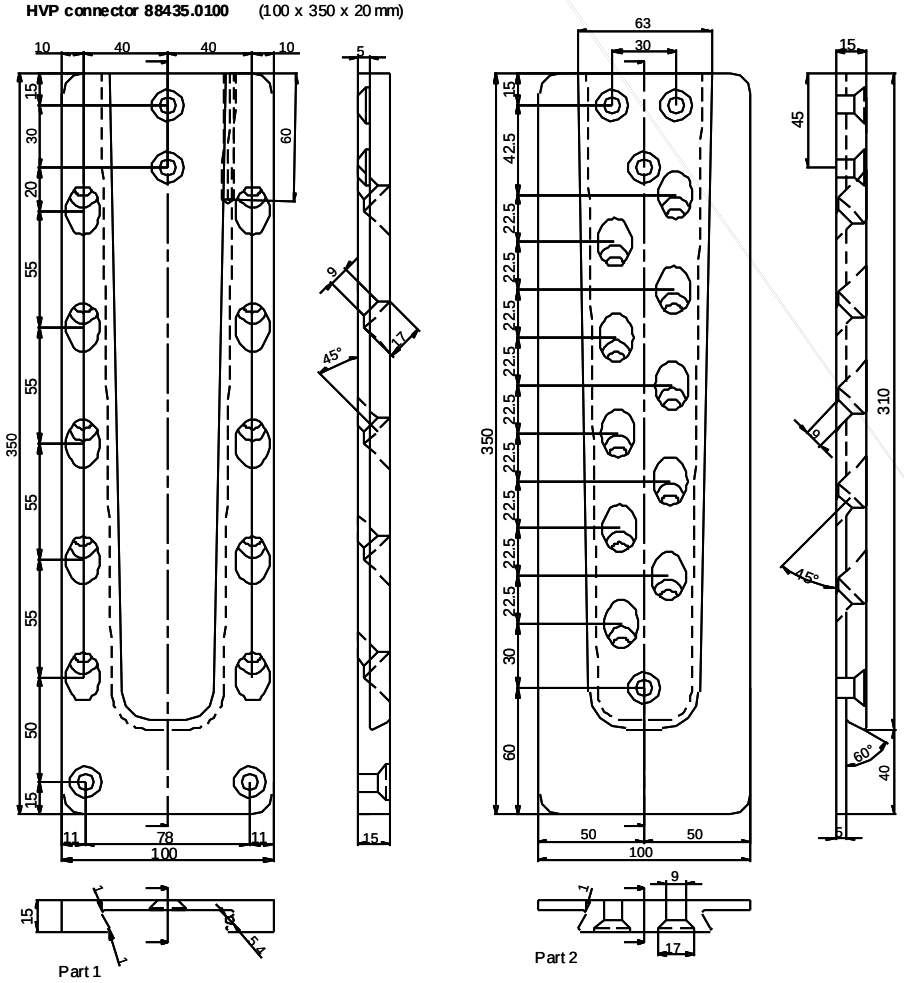

HVP connector 88440.0100 (100 x 400 x 20 mm)

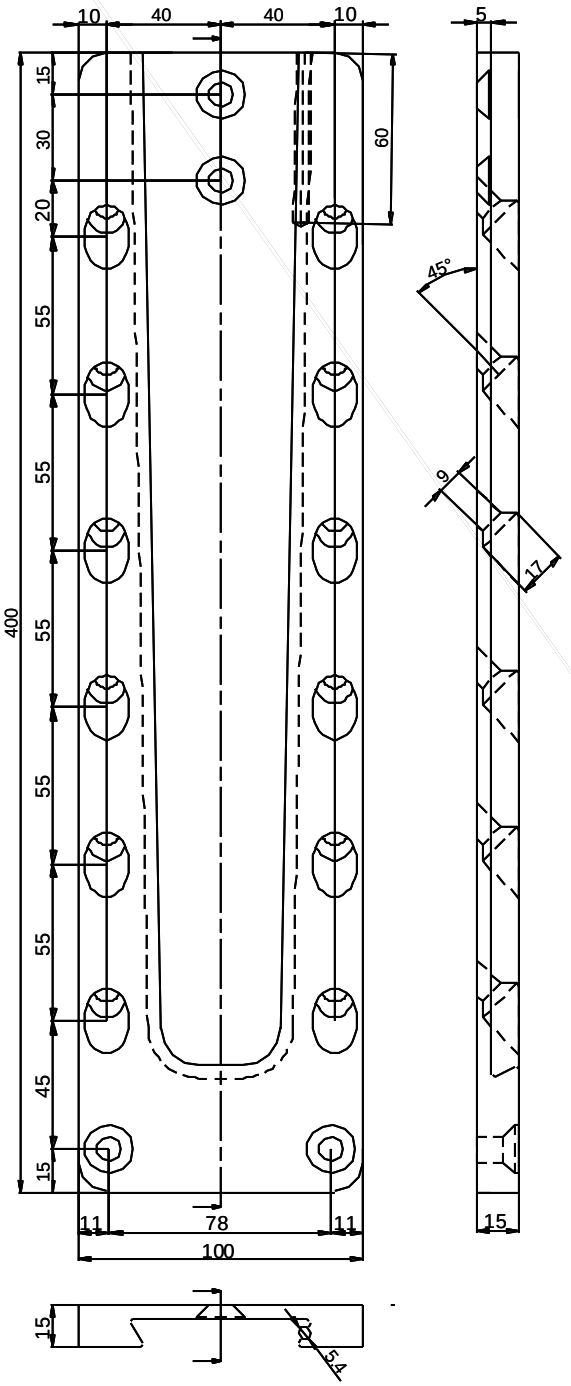

Part 1

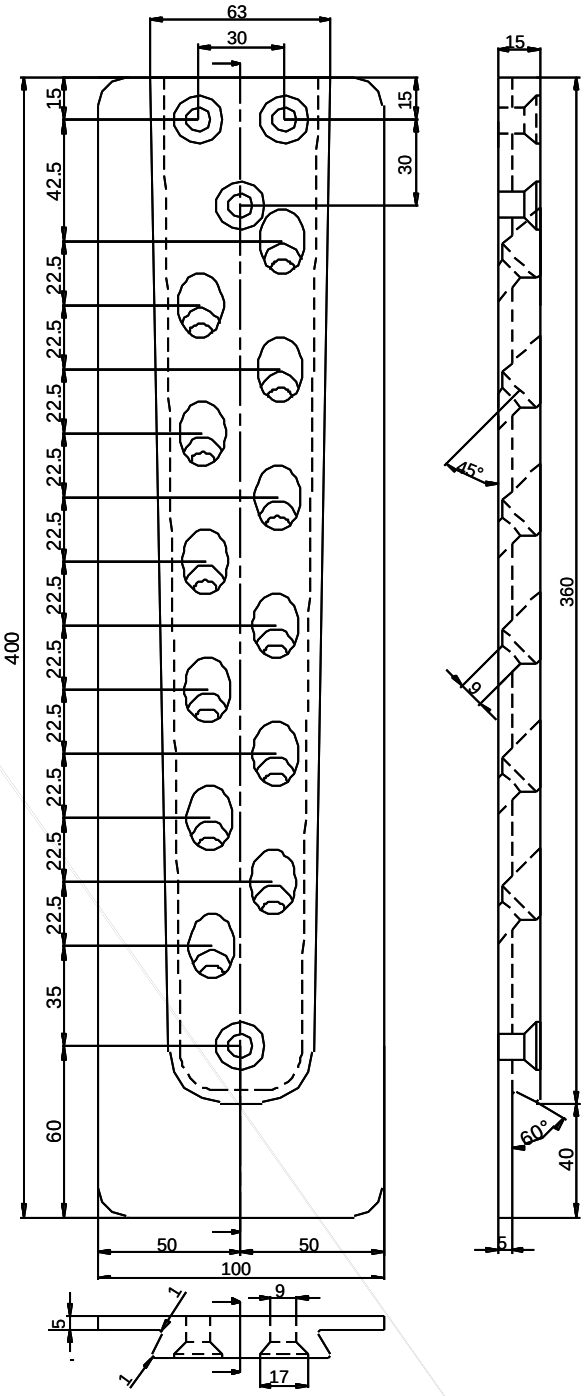

Part 2

HVP connector 88445.0100 (100 x 450 x 20 mm)

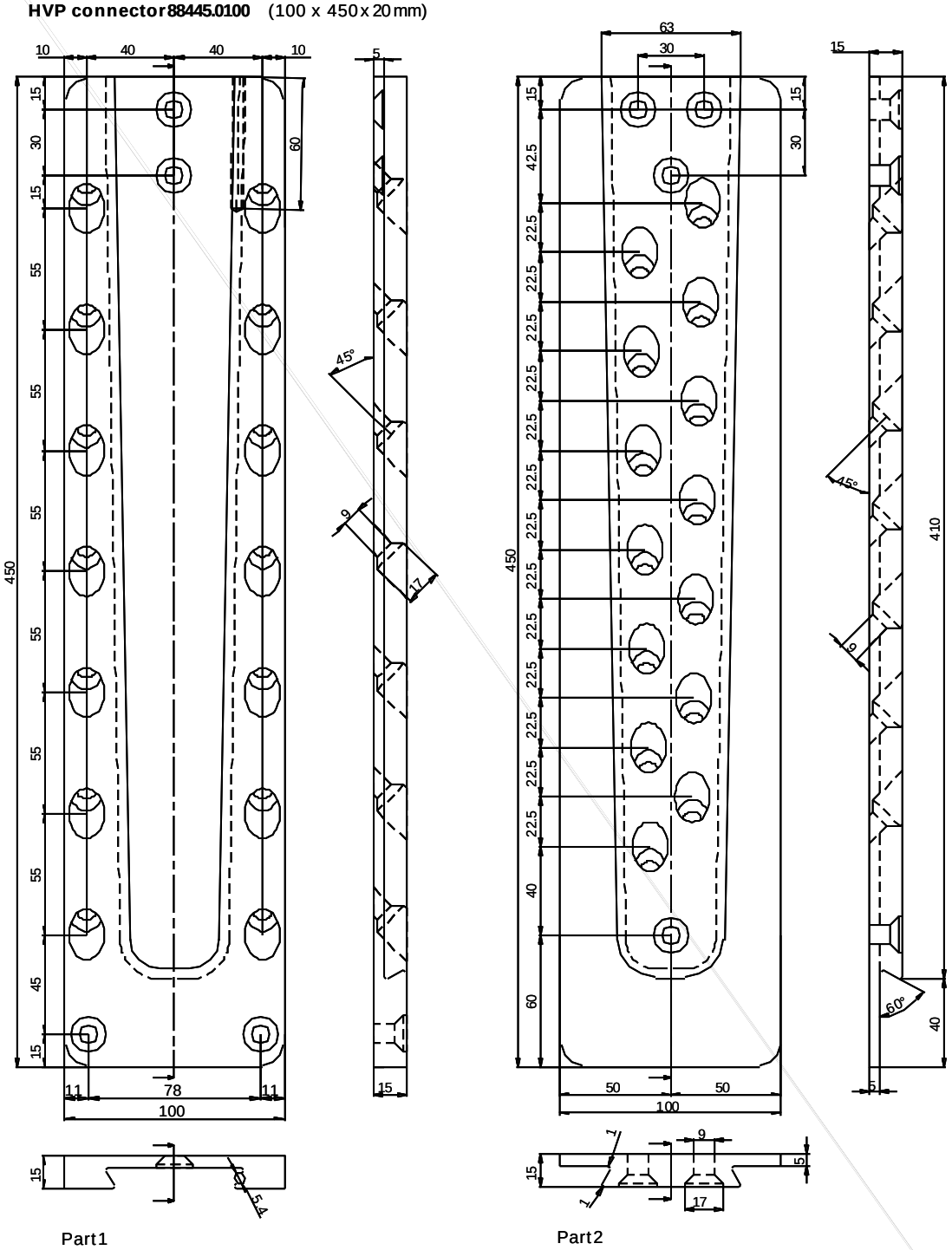

HVP connector 88450.0100 (100 x 500 x 20 mm)

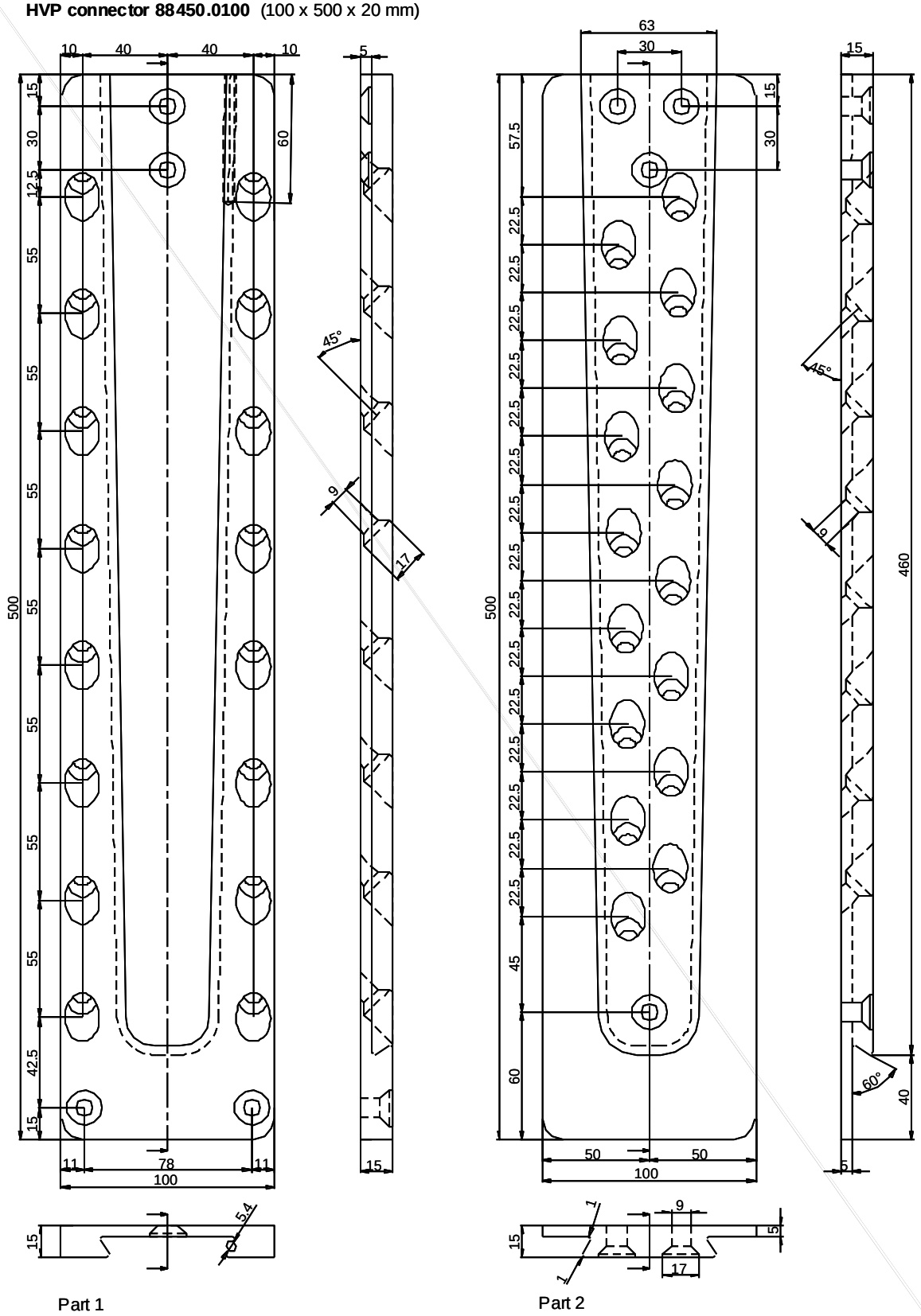

Part 1

Part 2

HVP connector 88455.0100 (100 x 550 x 20 mm)

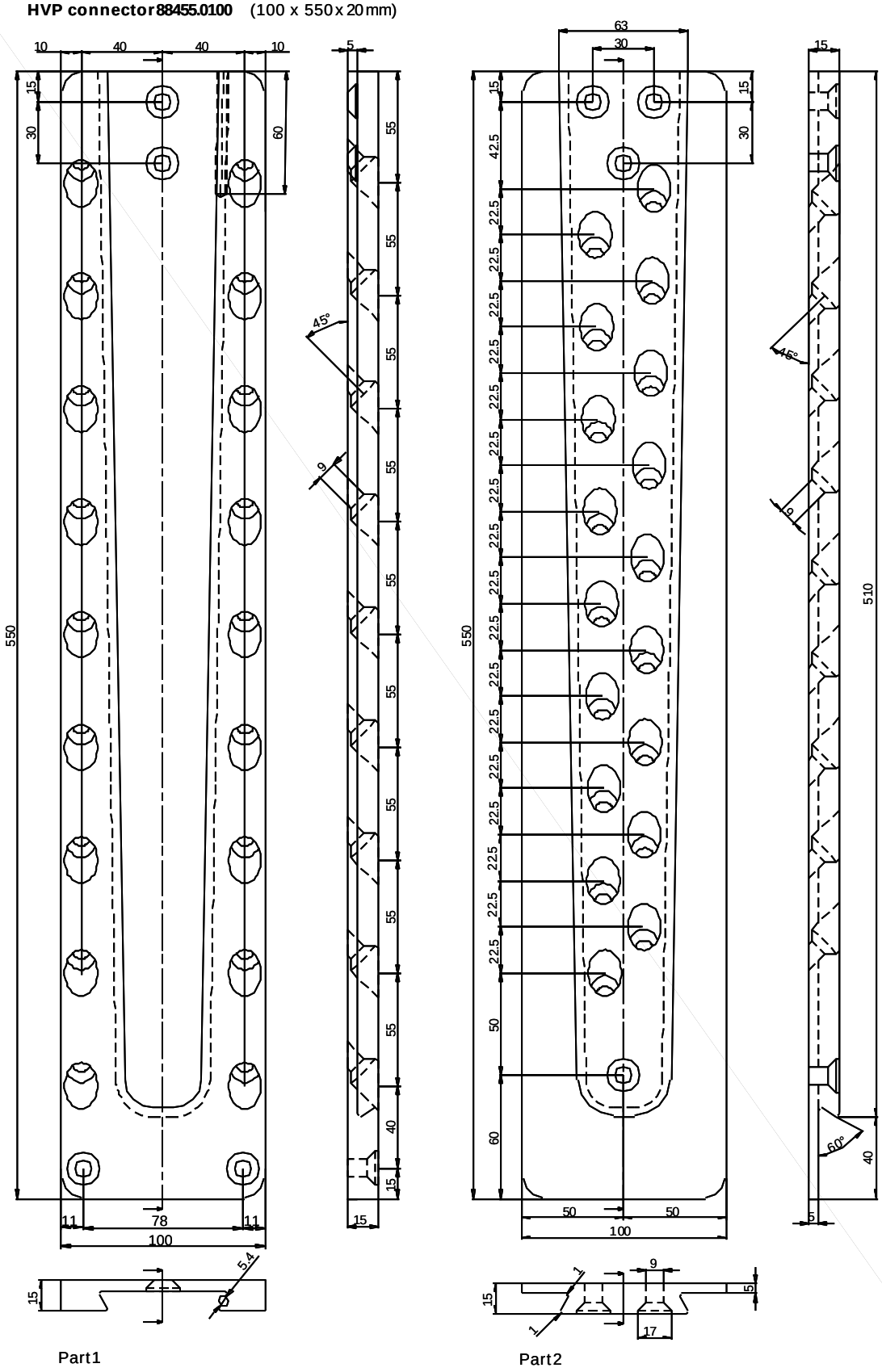

HVP connector 88460.0100 (100 x 600 x 20 mm)

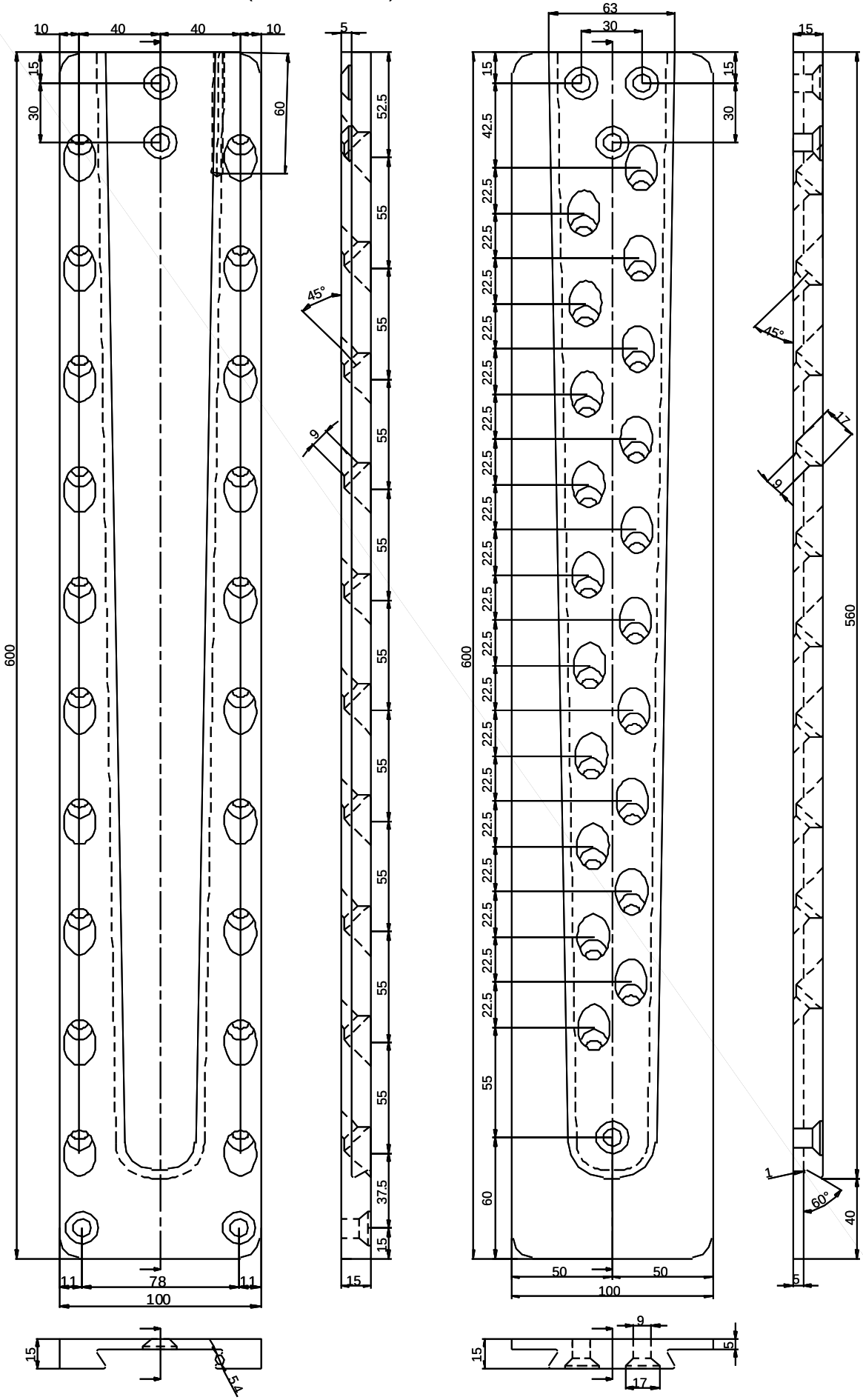

Part 1

Part 2

Timber-to-concrete or steel connections

HVP connector 88210.3000: Part 1 for concrete or steel

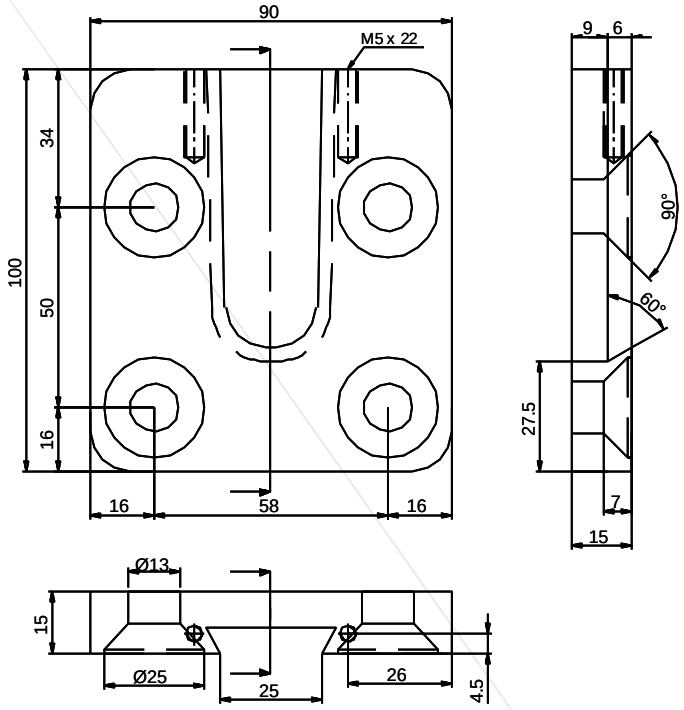

HVP connector 88214.3000: Part 1 for concrete or steel

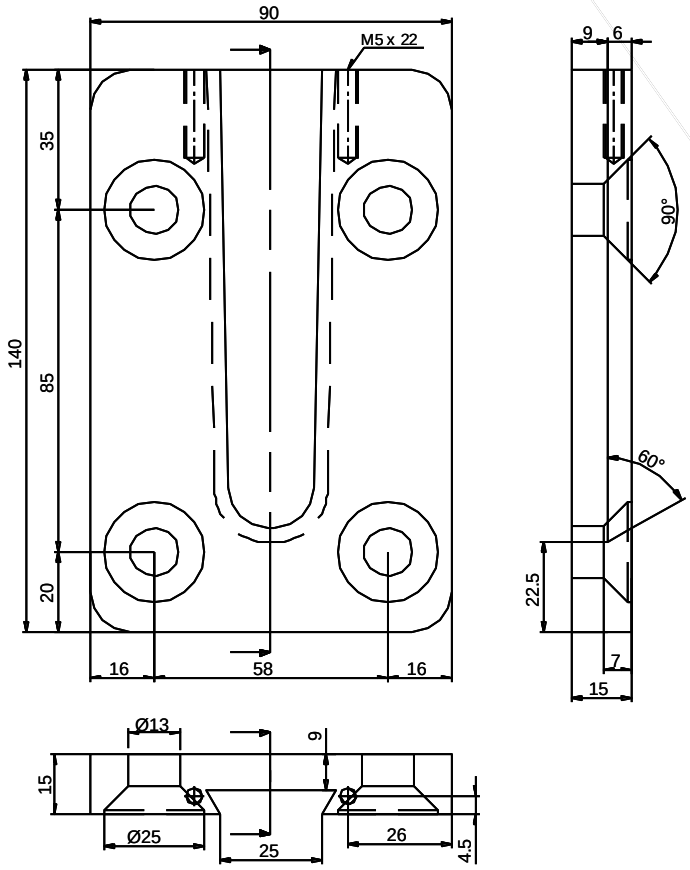

HVP connector 88318.3000: Part 1 for concrete or steel

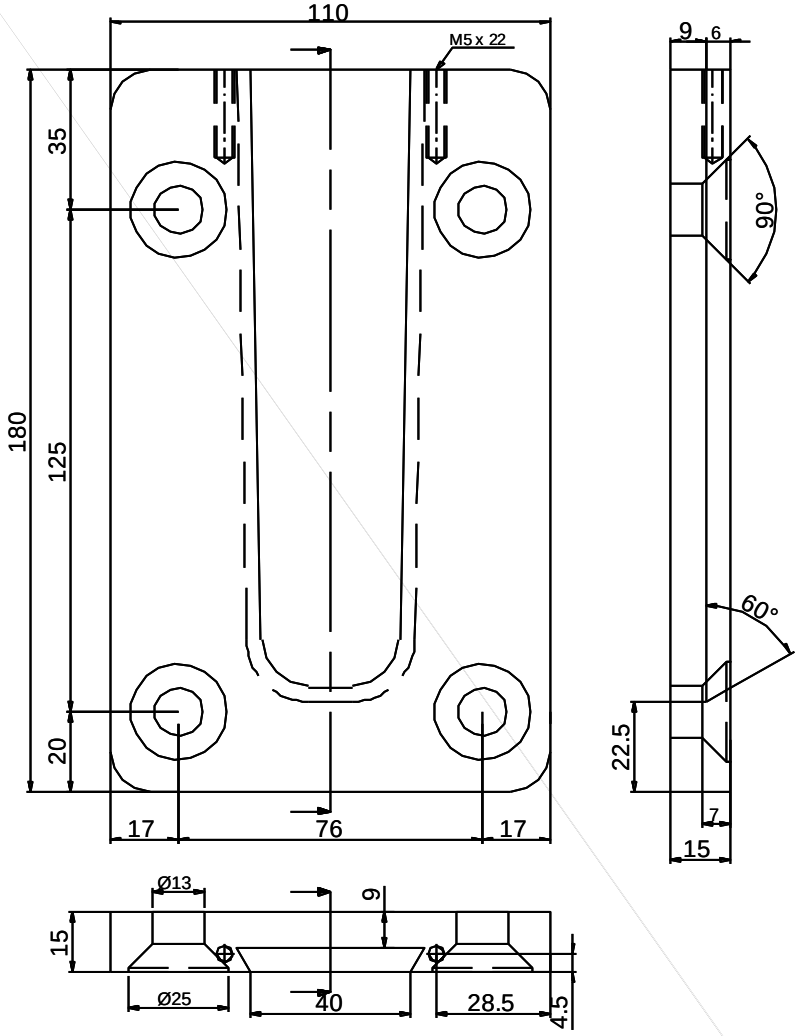

HVP connector 88322.3000: Part 1 for concrete or steel

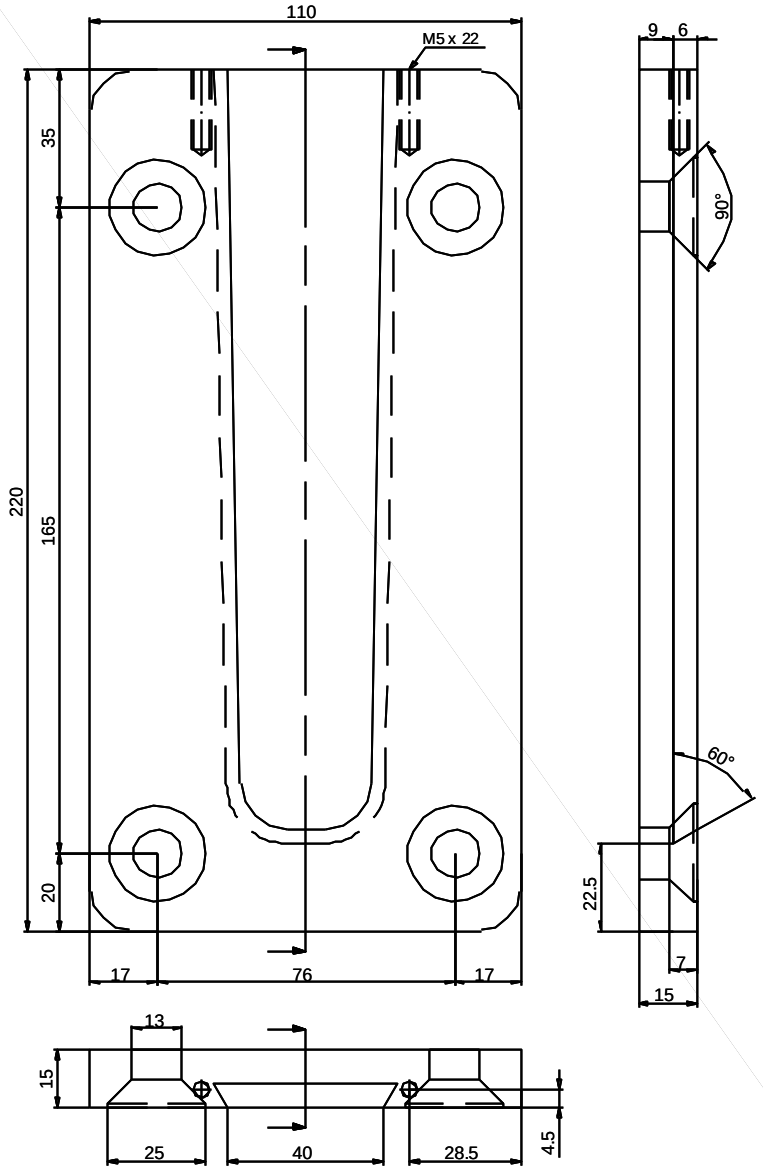

HVP connector 88420.3000: Part 1 for concrete or steel

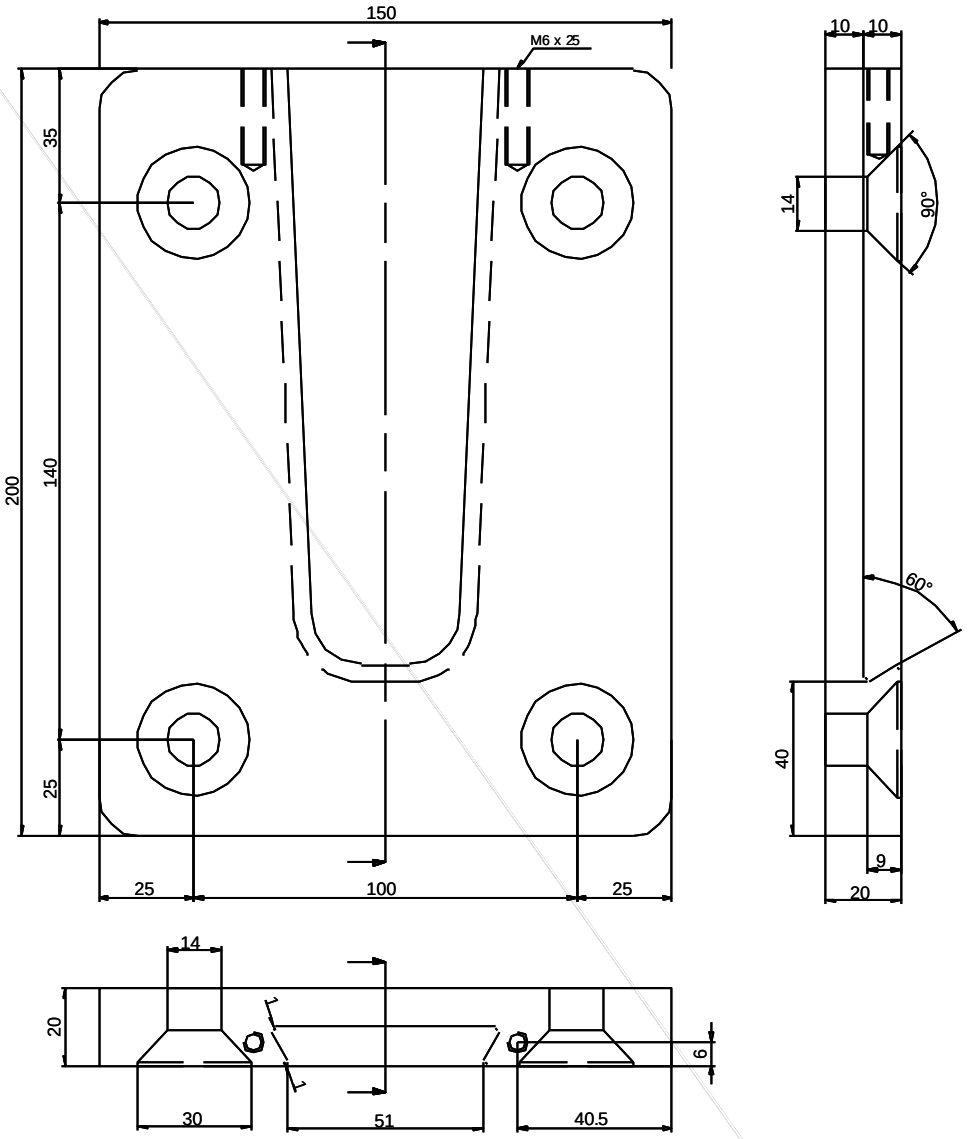

HVP connector 88425.3000: Part 1 for concrete or steel

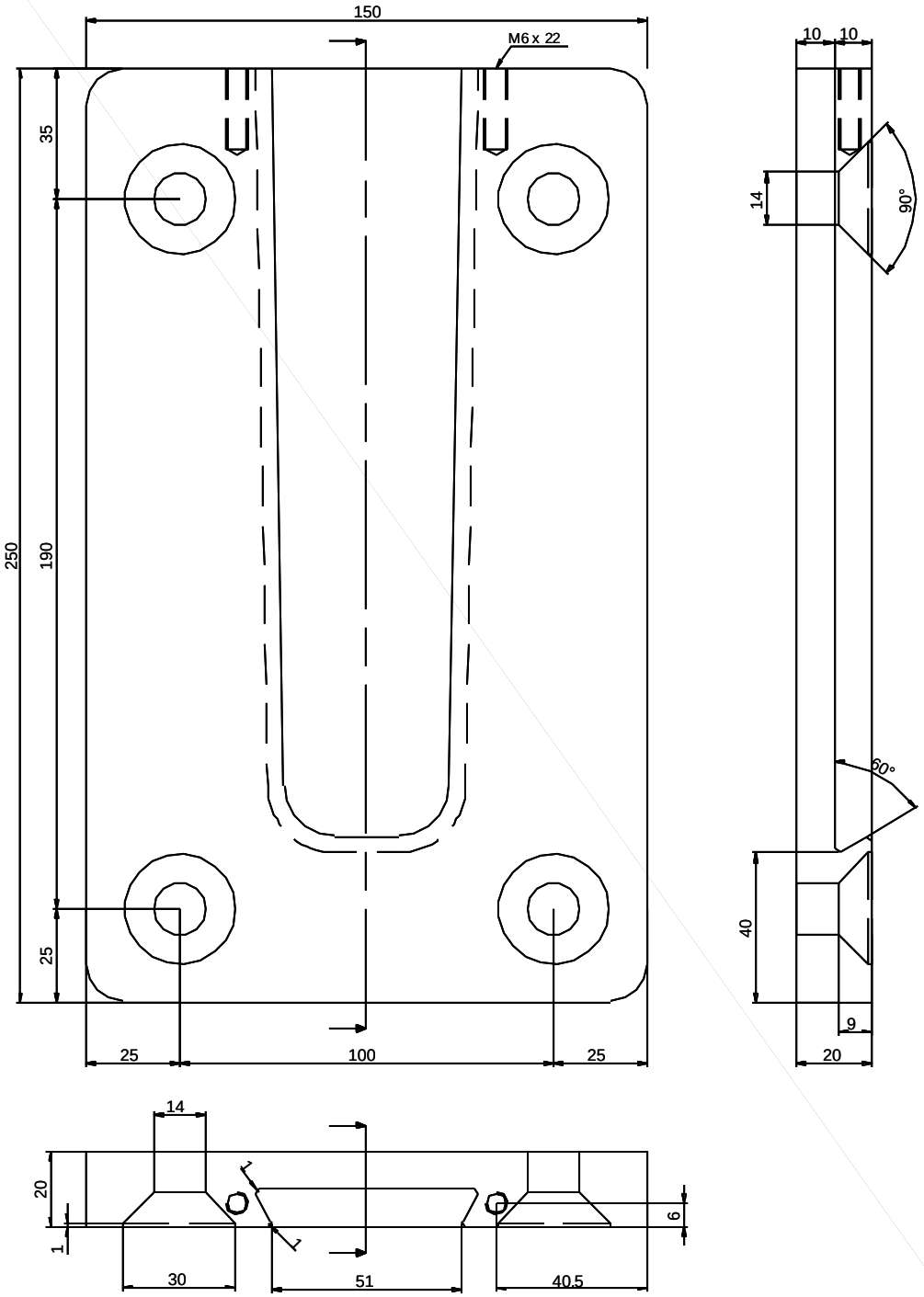

HVP connector 88430.3000: Part 1 for concrete or steel

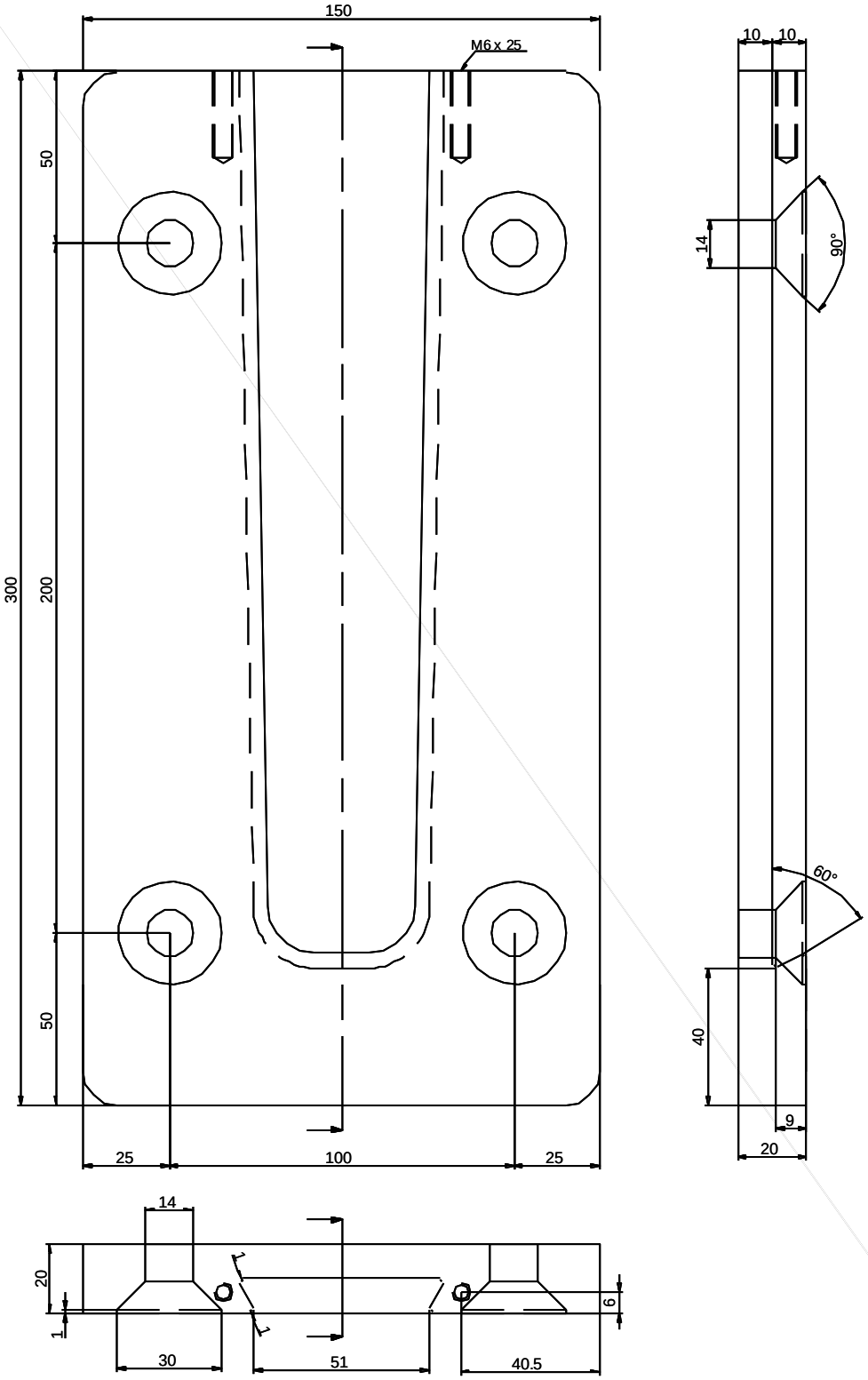

HVP connector 88435.3000: Part 1 for concrete or steel

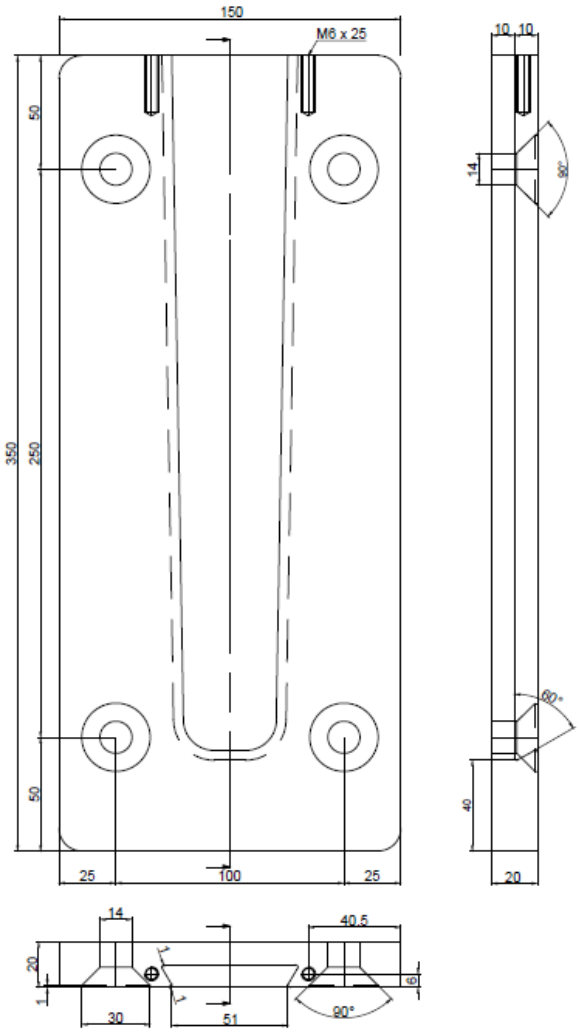

HVP connector 88435.3001: Part 1 for concrete or steel

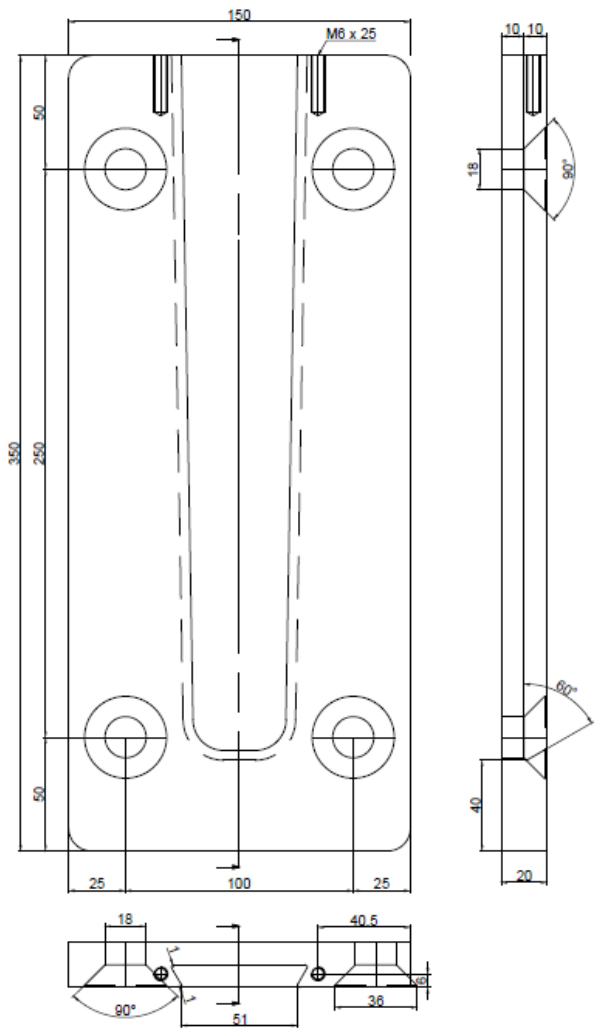

HVP connector 88440.3000: Part 1 for concrete or steel

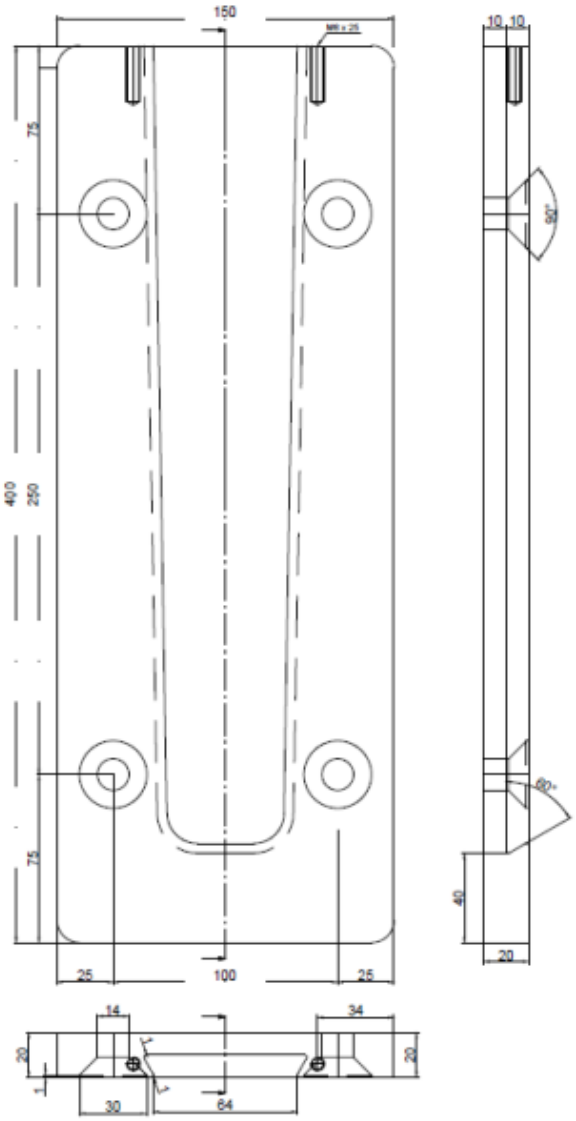

HVP connector 88440.3001: Part 1 for concrete or steel

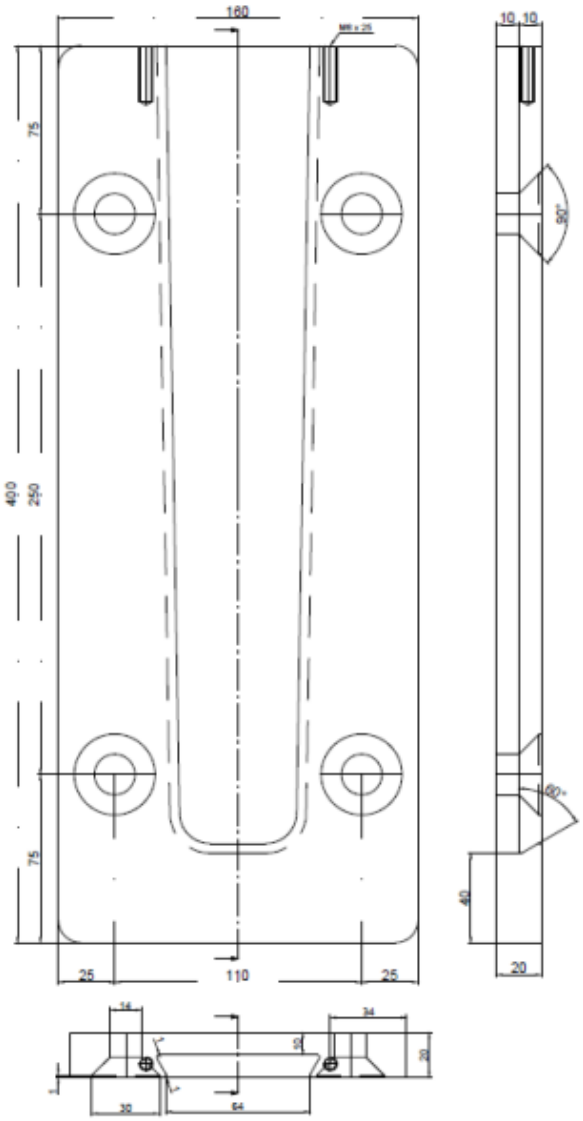

HVP connector 88440.3002: Part 1 for concrete or steel

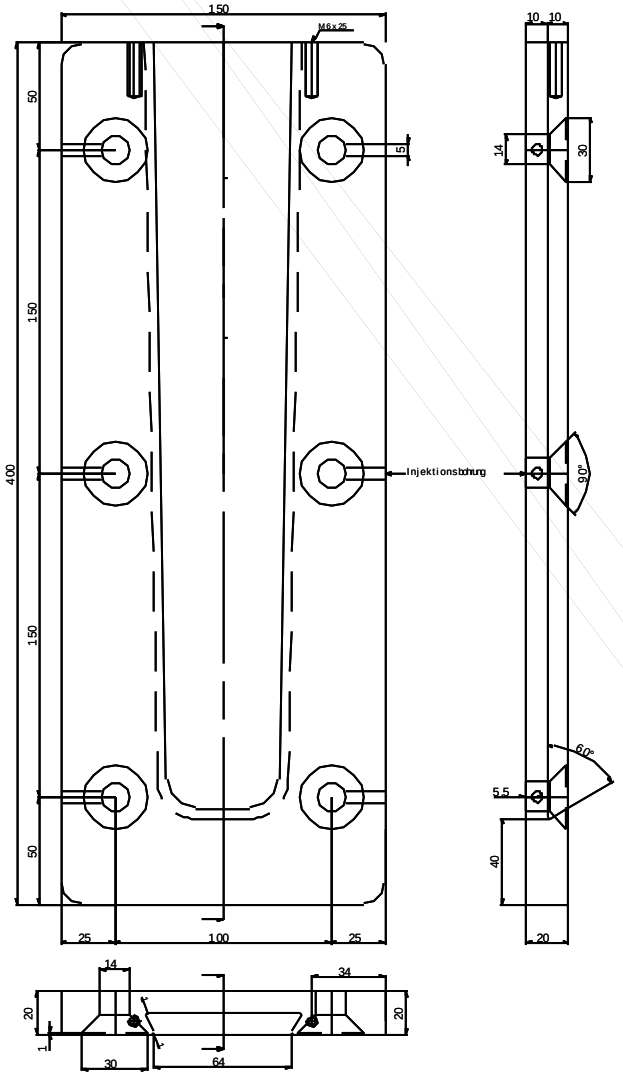

HVP connector 88440.3003: Part 1 for concrete or steel

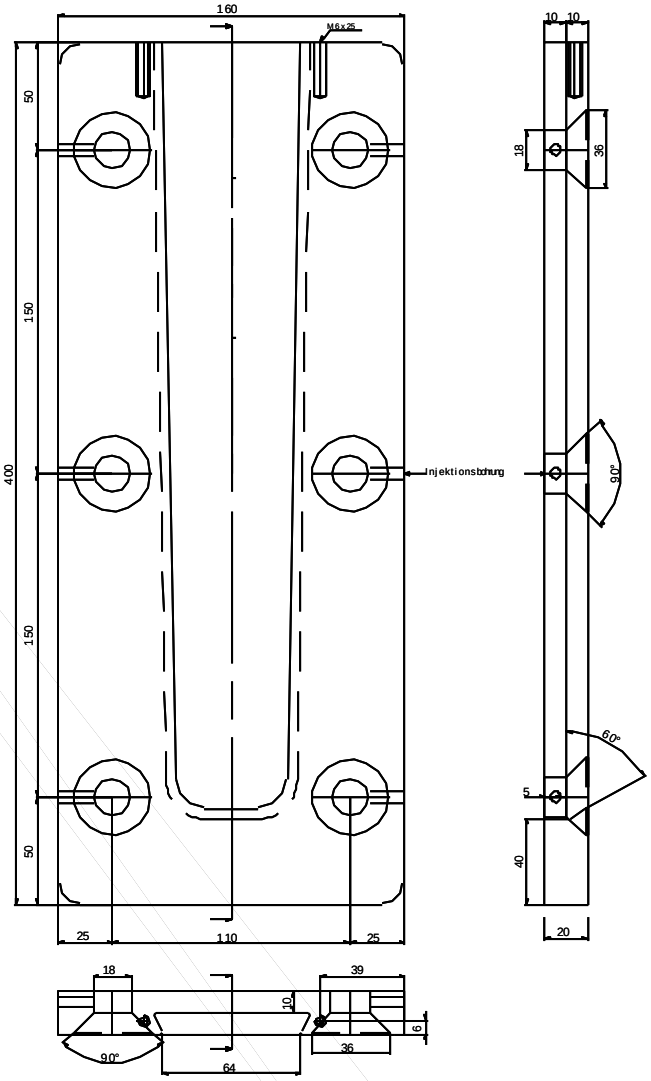

HVP connector 88445.3000: Part 1 for concrete or steel

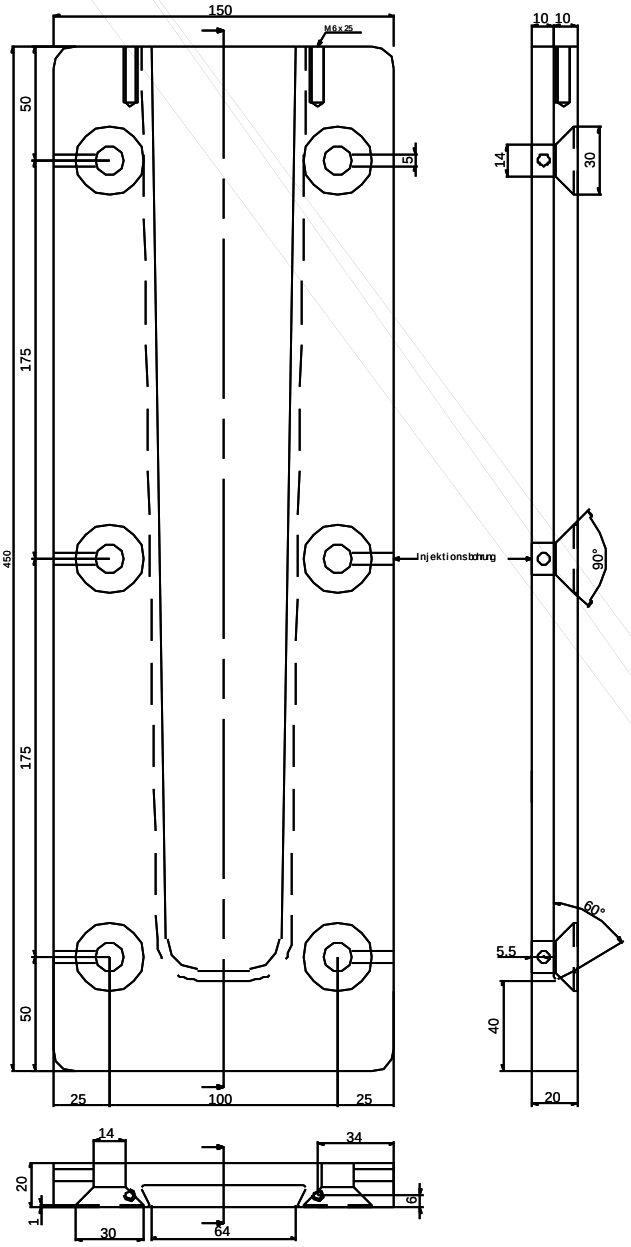

HVP connector 88445.3001: Part 1 for concrete or steel

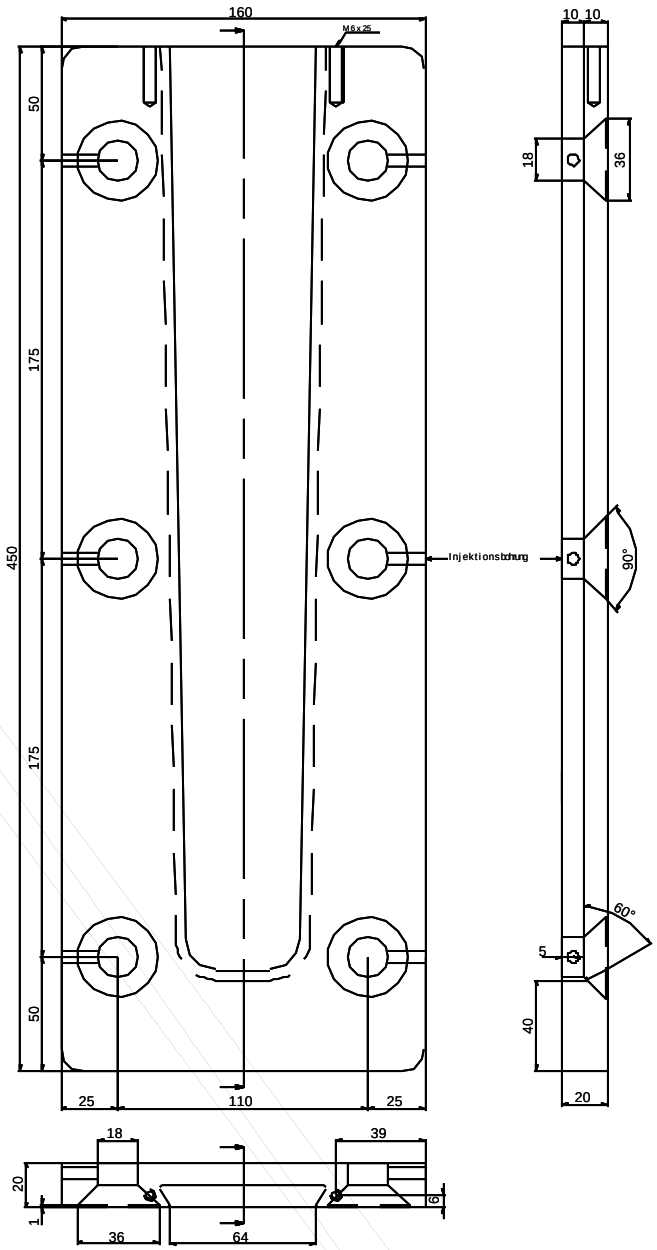

HVP connector 88450.3000: Part 1 for concrete or steel

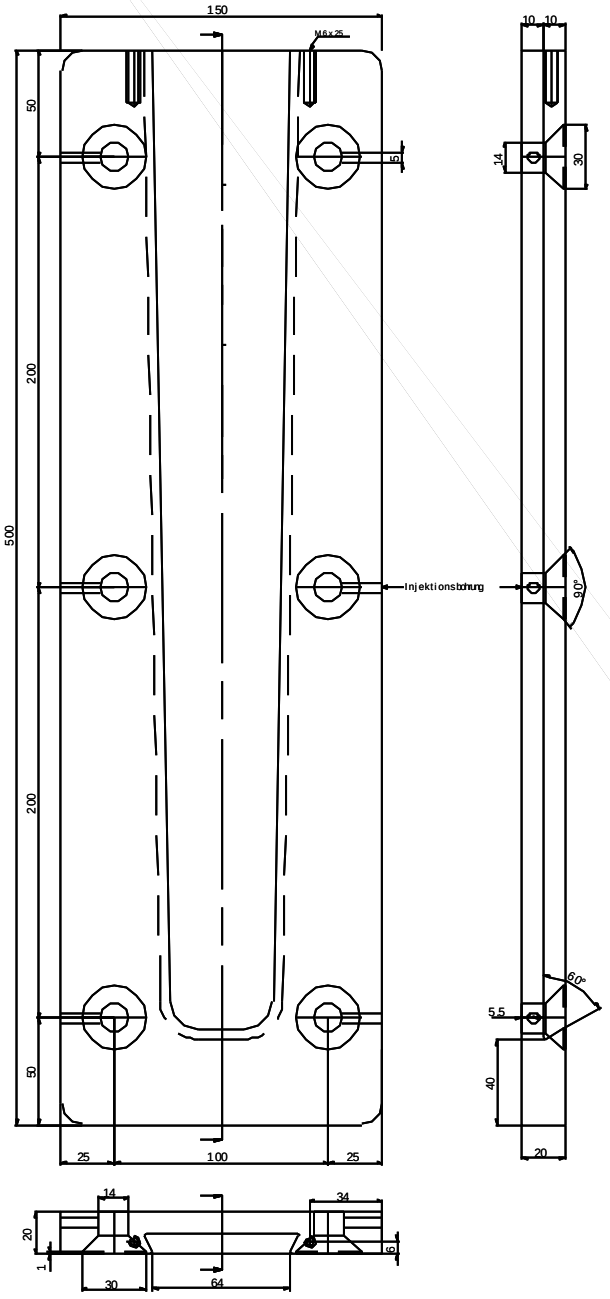

HVP connector 88450.3001: Part 1 for concrete or steel

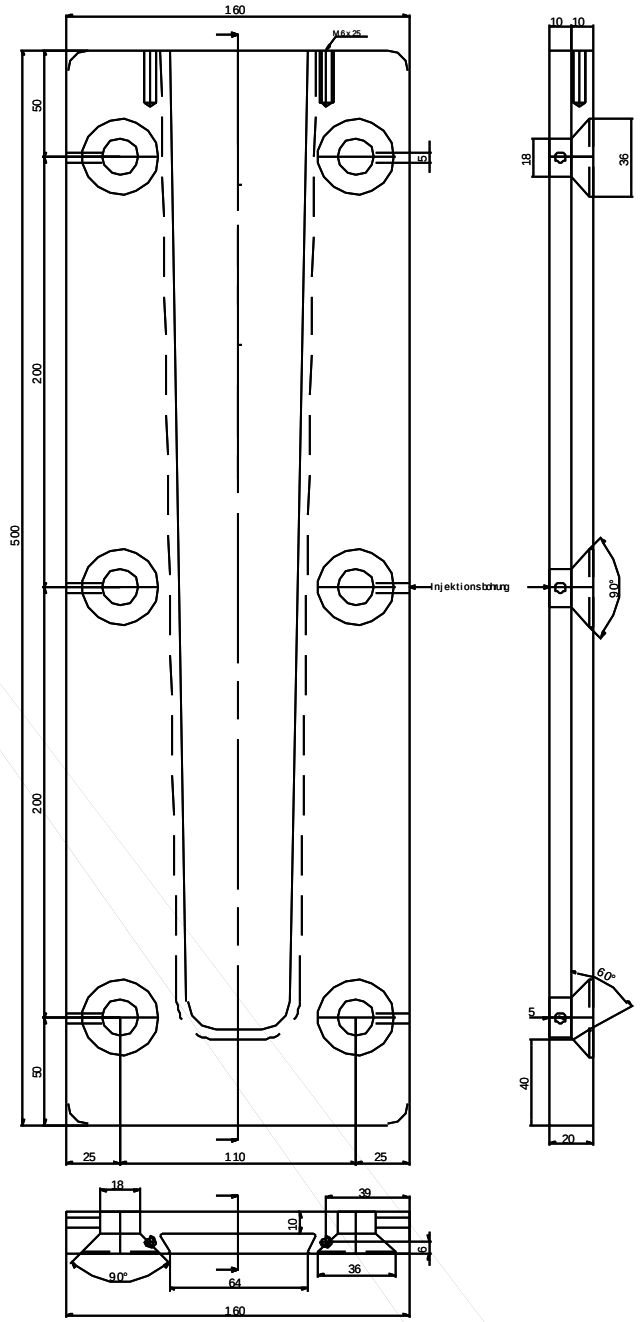

HVP connector 88455.3000: Part 1 for concrete or steel

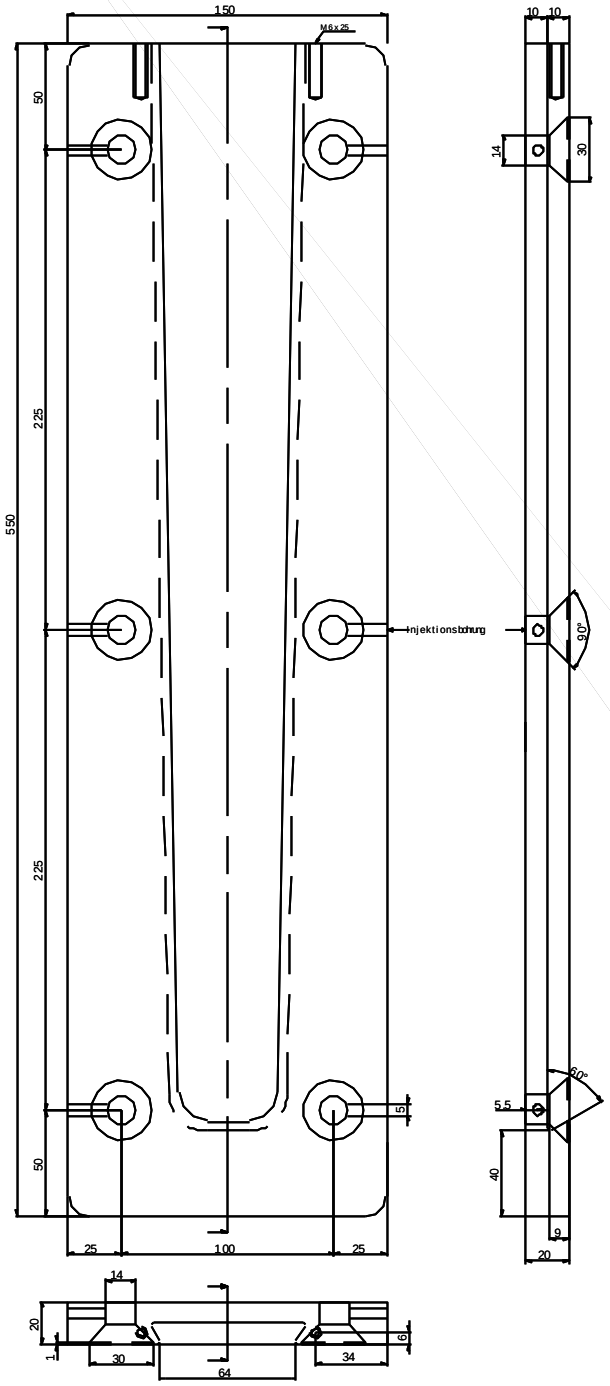

HVP connector 88455.3001: Part 1 for concrete or steel

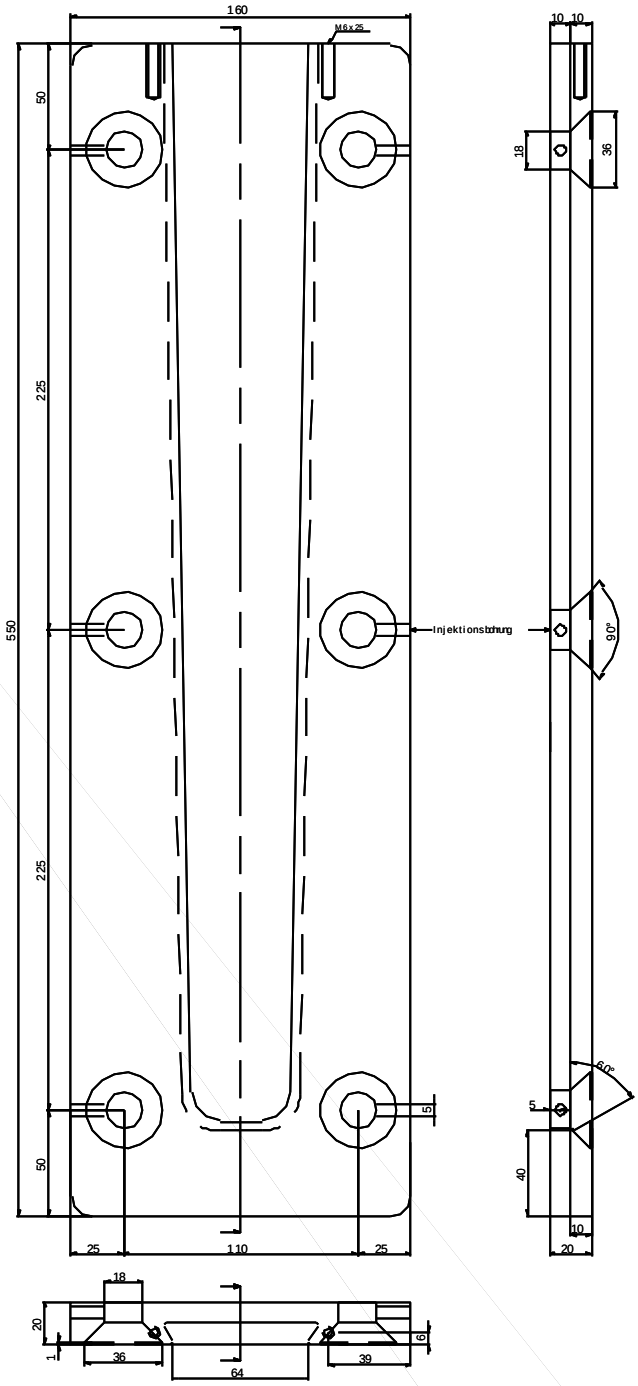

HVP connector 88460.3000: Part 1 for concrete or steel

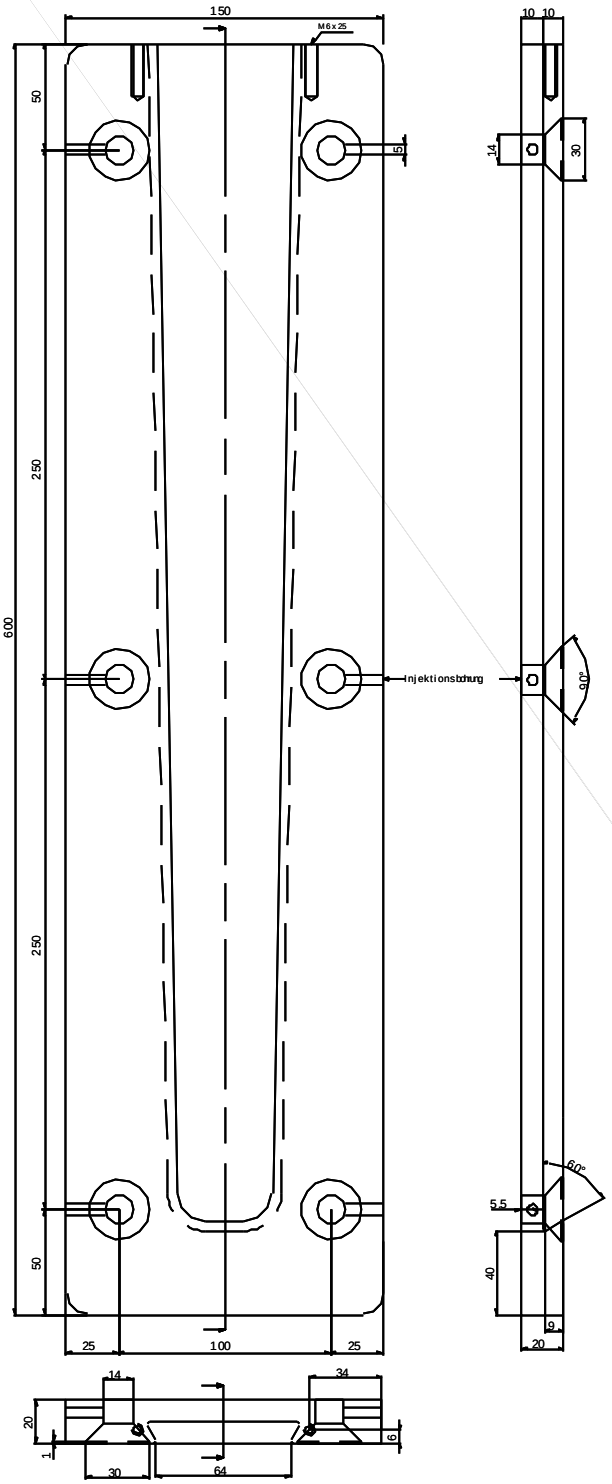

HVP connector 88460.3001: Part 1 for concrete or steel

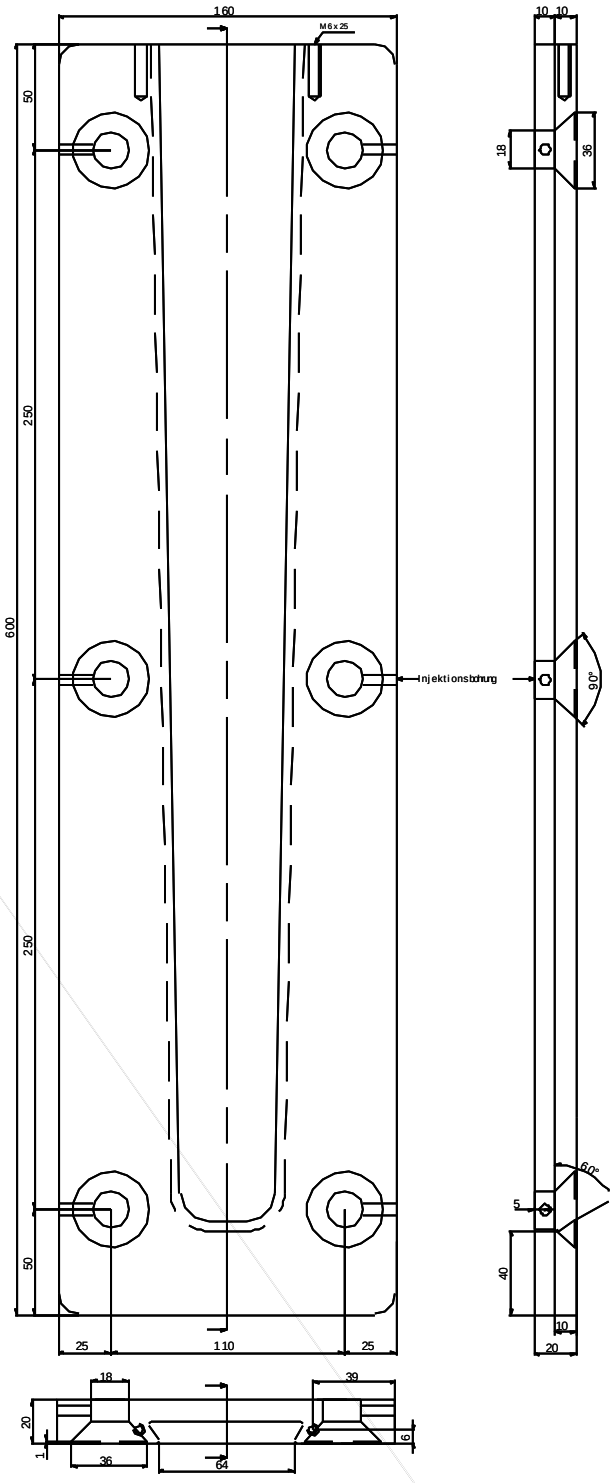

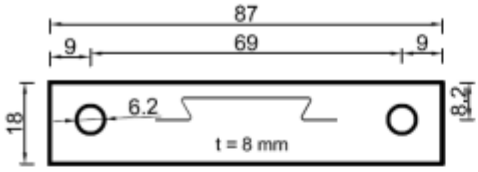

Für HVP Verbinder:
88420.0000
88425.0000
88430.0000
88435.0000

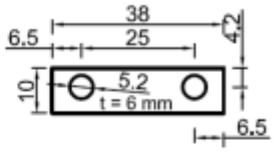

Für HVP Verbinder:
88107.1000
88109.1000
88111.1000
88113.1000
88115.1000

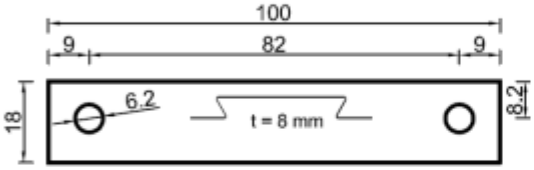

Für HVP Verbinder:
88440.0000
88445.0000
88450.0000
88455.0000
88460.0000

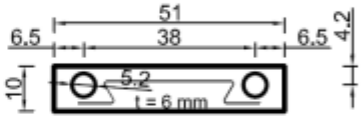

Für HVP Verbinder:
88210.1000
88214.1000

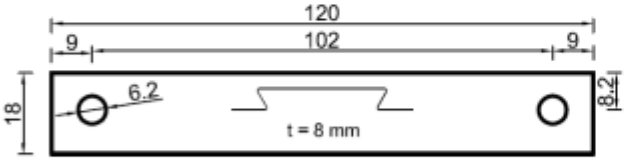

Für HVP Verbinder:
88540.0000
88545.0000
88550.0000
88555.0000
88560.0000

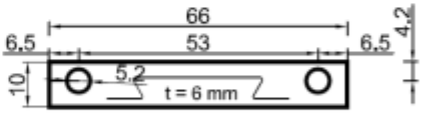

Für HVP Verbinder:
88318.1000
88322.1000

Material HVP Leisten EN AW 6082 Al Mg Si 1

pitzl®	Pitzl Metallbau GmbH & Co.KG Siemensstraße 26 D - 84051 Altheim Tel +49(0) 8703 9346-0 Fax +49(0) 8703 9346-55 www.pitzl.de	Erstellt:	Datum:	Werkstoff:	Artikelnummer:
		Index		Produktgruppe:	alt Artikelnummer:

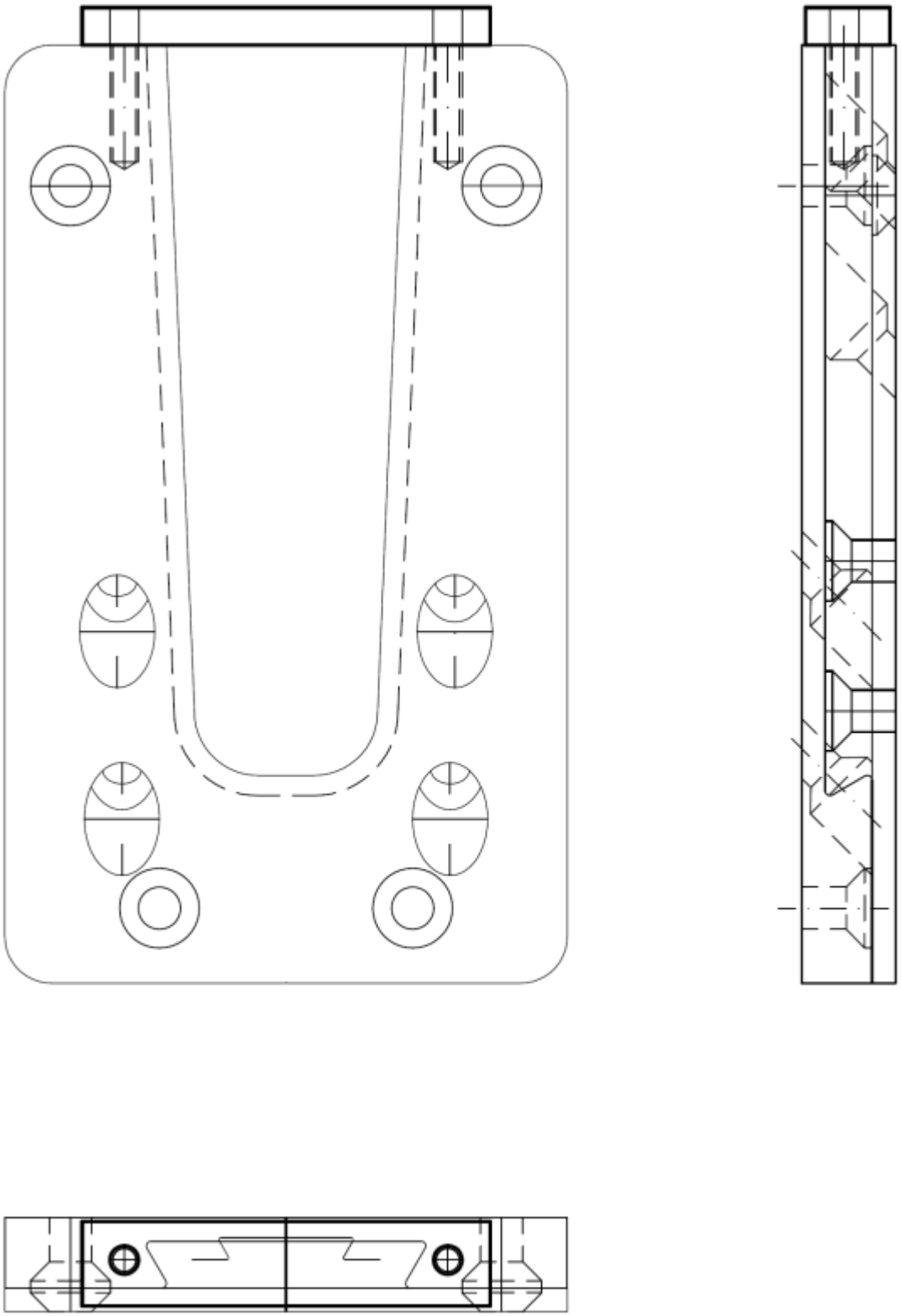

Pitzl	Pitzl Metallbau GmbH & Co.KG Siemensstraße 26 D - 84051 Altheim Tel +49(0) 8703 9346-0 Fax +49(0) 8703 9346-55 www.pitzl.de	Erstellt:	Datum:	Werkstoff:	Artikelnummer:
		Index		Produktgruppe:	alt Artikelnummer:

Minimum distances to the edges

HVP connectors 880xx to 881xx:

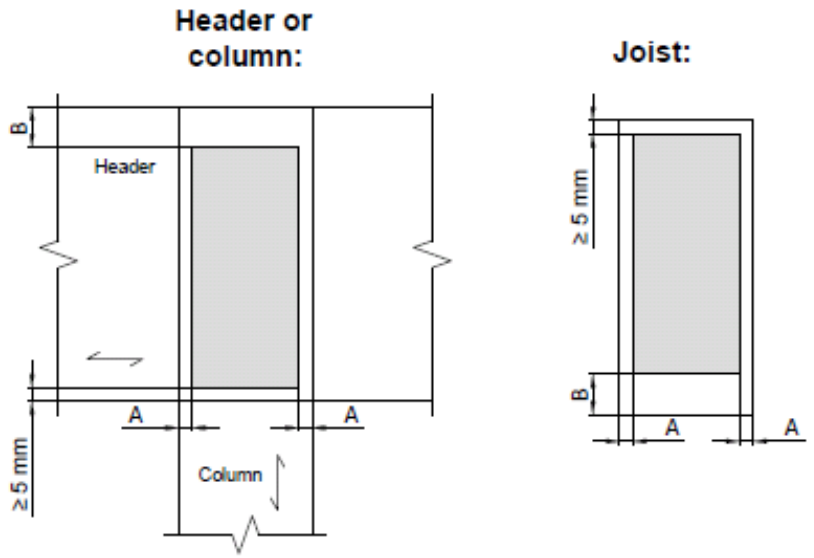

HVP connectors 882xx to 885xx:

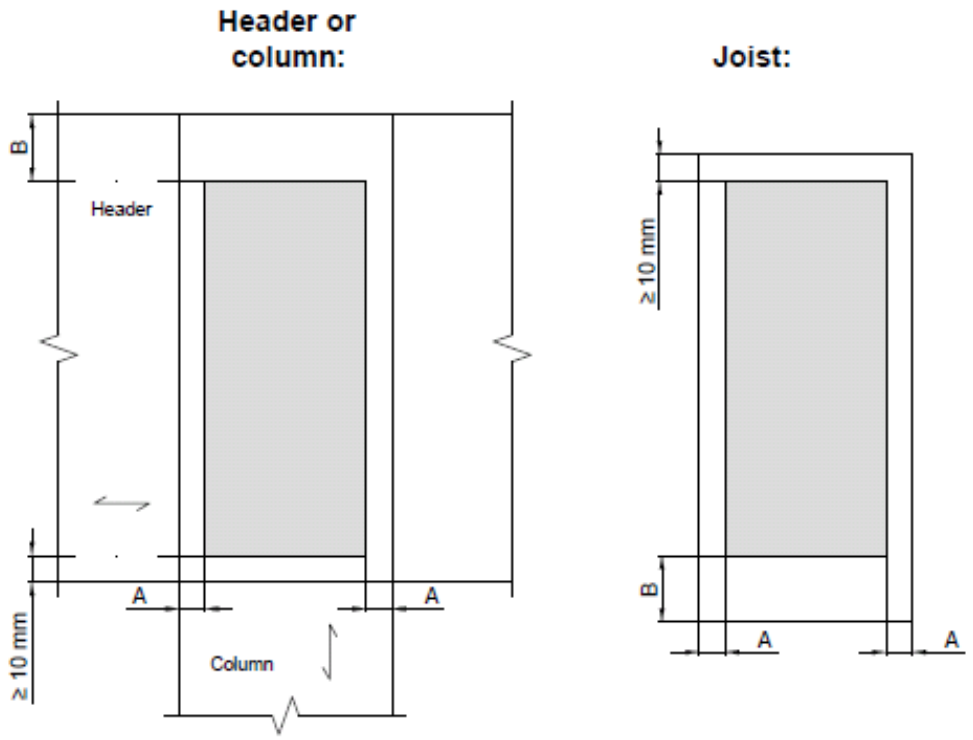

	HVP connectors		
	880xx to 881xx	**880xx**	**881xx**
Screws	**B**	**A**	**A**
Ø 4,5 x 50	5 mm	10 mm	Part 1: 10 mm Part 2: 5 mm
Ø 4,5 x 60	10 mm		
Ø 4,5 x 70	15 mm		
Ø 4,5 x 80	20 mm		

	HVP connectors 882xx to 883xx	
Screws	**B**	**A**
Ø 5 x 60	10 mm	10 mm
Ø 5 x 80	25 mm	
Ø 5 x 100	40 mm	

	HVP connectors			
	884xx to 885xx	**884xx.x000**	**884xx.0100**	**885xx**
Screws	**B**	**A**	**A**	**A**
Ø 8 x 160	10 mm	10 mm	20 mm	15 mm
Ø 8 x 180	25 mm			
Ø 8 x 200	40 mm			

Fastener types and sizes

SCREW diameter	Length	Screw type
4.0	10	Self-tapping screw according to DIN 7500-1:2009-06
5.0	20	Cylinder head screw according to DIN 912
6.0	20	Cylinder head screw according to DIN 912
4.5	50 - 80	Self-tapping screws according to EN 14592 or ETA
5.0	60 - 100	Self-tapping screws according to EN 14592 or ETA
8.0	100 - 200	Self-tapping screws according to EN 14592 or ETA

BOLTS or METAL ANCHORS diameter	Corresponding hole diameter in aluminium plate	Fastener type
12.0 16.0	Max. 2 mm larger than the bolt or dowel diameter	Bolts according to EN 14592, metal anchors according to manufacturer’s specification

Annex B
Characteristic values of load-carrying-capacities and stiffness

The forces perpendicular to the connector plate are assumed to act in the middle of the joist.

Only a full fastener pattern is specified, where there are screws in all the holes of the joist and header connection.

B.1 Timber-to-timber connections with screws - torsionally restrained header beam

Loading perpendicular to the connector plane

$$F_{1,Rk} = \min\left\{h \cdot 200\,;\, n_{90,J} \cdot F_{ax,0,J,Rk}\right\} \text{ in N} \tag{B.1}$$

Loading in the direction of insertion for $e_2 \leq e_{lim}$

$$F_{2,Rk} = \min\begin{cases} F_{2,J,Rk} \\ F_{2,H,Rk} \\ F_{2,ALU,Rk} \end{cases} \tag{B.2}$$

$$K_{2,ser} = \frac{F_{2,Rk}}{3\,\text{mm}} \tag{B.3}$$

HVP connectors 880xx to 881xx:

$$F_{2,J,Rk} = \frac{n_{60} \cdot F_{ax,\alpha,J,Rk}}{\sqrt{2}} \tag{B.4}$$

$$F_{2,H,Rk} = \frac{n_{60} \cdot F_{ax,\alpha,H,Rk}}{\sqrt{2}} \tag{B.5}$$

HVP connectors 882xx to 885xx:

$$F_{2,J,Rk} = \frac{1,25 \cdot \sum_{i=1}^{n_{45}} F_{ax,\alpha,J,Rk,i}}{\sqrt{2}} \tag{B.6}$$

$$F_{2,H,Rk} = \frac{1,25 \cdot \sum_{i=1}^{n_{45}} F_{ax,\alpha,H,Rk,i}}{\sqrt{2}} \tag{B.7}$$

Loading in the direction of insertion for $e_2 > e_{lim}$

$$F'_{2,Rk} = \frac{F_{2,Rk}}{\left(1+\left(\frac{e_2 - e_{lim}}{e_M}\right)^3\right)^{1/3}} \tag{B.8}$$

$$K_{2,\varphi,ser} = \frac{100 \cdot M_{2,Rk}}{\text{rad}} \tag{B.9}$$

Loading against the direction of insertion

HVP connectors 880xx: $$F_{3,Rk} = n_L \cdot 3,3\,\text{kN} \tag{B.10}$$

HVP connectors 881xx to 883xx: $$F_{3,Rk} = \min\begin{cases} (n_{90,J} + n_{45,J}) \cdot F_{la,J,Rk} \\ (n_{90,H} + n_{45,H}) \cdot F_{la,H,Rk} \\ 21,8\,\text{kN} \end{cases} \tag{B.11}$$

HVP connectors 884xx to 885xx:

$$F_{3,Rk} = \min \begin{cases} (n_{90,J} + n_{45,J}) \cdot F_{la,J,Rk} \\ (n_{90,H} + n_{45,H}) \cdot F_{la,H,Rk} \\ 36,4\ \text{kN} \end{cases} \quad \text{(B.12)}$$

Loading perpendicular to the direction of insertion

$$F_{4,Rk} = \min \begin{cases} \dfrac{F_{la,J,Rk}}{\sqrt{\left(\dfrac{1}{(n_{90} + n_{45/60})} + \dfrac{e_{45}}{e_{1,J}}\right)^2 + \left(\dfrac{e_{45}}{e_{2,J}}\right)^2}} \\ \dfrac{F_{la,H,Rk}}{\sqrt{\left(\dfrac{1}{(n_{90} + n_{45/60})} + \dfrac{e_{45}}{e_{1,H}}\right)^2 + \left(\dfrac{e_{45}}{e_{2,H}}\right)^2}} \end{cases} \quad \text{(B.13)}$$

Loading by a torsional moment around the joist axis

$$M_{tor,J,Rk} = F_{la,J,Rk} \cdot e_3 \quad \text{(B.14)}$$

$$K_{tor,ser} = \frac{40 \cdot M_{tor,J,Rk}}{\text{rad}} \quad \text{(B.15)}$$

Where:

h	Depth of the connector plate
α	Angle between screw axis and grain direction
$\ell_{ef,J}$	Penetration depth of the threaded part of a joist screw
$\ell_{ef,H}$	Penetration depth of the threaded part of a header screw
$\rho_{k,J}$	Characteristic density of the joist
$\rho_{k,H}$	Characteristic density of the header/column
$n_{45/60}$	Number of inclined screws in the joist or header/column plate of the HVP connector
n_{90}	Number of screws perpendicular to the joist or header/column plate of the HVP connector
n_L	Number of locking screws per joist or header/column plate for loads against the direction of insertion
$F_{la,J,Rk}$	Lateral capacity of a joist screw, $F_{la,J,Rk} = 2,3 \cdot \sqrt{0,8 \cdot M_{y,k} \cdot f_{h,k} \cdot d}$
$F_{la,H,Rk}$	Lateral capacity of a header/column screw, $F_{la,H,Rk} = 2,3 \cdot \sqrt{2 \cdot M_{y,k} \cdot f_{h,k} \cdot d}$
$M_{y,k}$	Characteristic yield moment of a screw
$f_{h,k}$	Characteristic embedding strength according to equation (8.15) of Eurocode 5
d	Outer thread diameter of a screw
$F_{ax,\alpha,J,Rk}$	Withdrawal capacity of an inclined joist screw, $F_{ax,\alpha,J,Rk} = \dfrac{0,52 \cdot \sqrt{d} \cdot \ell_{ef,J}^{0,9} \cdot \rho_{k,J}^{0,8}}{1,2 \cdot \cos^2\alpha + \sin^2\alpha}$,
	only for HECO UNIX screws: $F_{ax,\alpha,J,Rk} = \dfrac{11,9 \cdot d \cdot \ell_{ef,J}}{1,2 \cdot \cos^2\alpha + \sin^2\alpha} \cdot \left(\dfrac{\rho_{k,J}}{350}\right)^{0,8}$
$F_{ax,\alpha,H,Rk}$	Withdrawal capacity of an inclined header/column screw, $F_{ax,\alpha,H,Rk} = \dfrac{0,52 \cdot \sqrt{d} \cdot \ell_{ef,H}^{0,9} \cdot \rho_{k,H}^{0,8}}{1,2 \cdot \cos^2\alpha + \sin^2\alpha}$
	only for HECO UNIX screws: $F_{ax,\alpha,H,Rk} = \dfrac{11,9 \cdot d \cdot \ell_{ef,H}}{1,2 \cdot \cos^2\alpha + \sin^2\alpha} \cdot \left(\dfrac{\rho_{k,H}}{350}\right)^{0,8}$
$F_{2,ALU,Rk}$	Load-carrying capacity of the aluminium connector itself (see Table B.1)
e_2	Eccentricity of the force $F_{2,Ed}$ with regard to the joist end grain surface
e_{45}	Eccentricity of the force $F_{4,Ed}$ with regard to the centre of the HVP connector

e_{lim} HVP connector dimension (see Table B.1)

e_M $M_{2,Rk}/F_{2,Rk}$

$M_{2,Rk}$ The lower characteristic moment capacity of the joist or header/column connection

$$M_{2,Rk} = F_{ax,Rk} \cdot e_Z + F_{2,Ed} \cdot e_{lim}$$

$F_{ax,Rk}$ Withdrawal capacity of a moment screw arranged perpendicular to the connector plate

e_Z HVP connector dimension (see Table B.1)

$e_{1,J}$, $e_{2,J}$, $e_{1,H}$, $e_{2,H}$, e_3 HVP connector dimensions (see Table B.1);

Table B.1: HVP connectors; dimensions, number of screws and $F_{2,ALU,Rk}$

HVP connector No.	Width b [mm]	Depth h [mm]	Screw diameter [mm]	Number of screws				e_{lim} [mm]	e_Z [mm]	$e_{1,J}$ [mm]	$e_{2,J}$ [mm]	$e_{1,H}$ [mm]	$e_{2,H}$ [mm]	e_3 [mm]	$F_{2,ALU,Rk}$ [kN]
				Part 1		Part 2									
				n_{90}	$n_{45/60}$	n_{90}	$n_{45/60}$								
88004.1000	25	40	4,5	2	1	2	1	13	0	38	65	32	20	26	32,5
88006.1000	25	60	4,5	2	2	2	2	11	0	65	215	60	192	52	32,5
88008.1000	25	80	4,5	2	3	2	3	11	0	98	448	91	431	87	32,5
88010.1000	25	100	4,5	2	4	2	4	13	0	139	853	122	767	132	32,5
88107.1000	40	70	4,5	2	3	2	3	26	0	78	149	100	98	60	32,5
88109.1000	40	90	4,5	3	4	3	4	38	66	138	416	163	371	124	32,5
88111.1000	40	110	4,5	3	5	3	5	51	86	189	736	215	665	175	32,5
88113.1000	40	130	4,5	3	6	3	6	63	106	248	1180	278	1020	233	32,5
88115.1000	40	150	4,5	3	8	3	8	74	126	328	1850	355	1540	313	32,5
88210.1000	60	100	5,0	4	5	4	5	17	129	237	402	243	462	173	59,8
88214.1000	60	140	5,0	4	8	4	8	33	121	365	951	311	816	290	59,8
88318.1000	80	180	5,0	5	12	5	12	46	180	599	1540	588	1470	471	91,3
88322.1000	80	220	5,0	6	16	6	16	58	268	890	2890	867	2770	714	91,3
88420.1000	120	200	8,0	4	4	4	4	33	308	298	402	506	846	201	250
88425.1000	120	250	8,0	4	6	4	6	51	408	431	816	655	1450	319	250
88430.1000	120	300	8,0	4	8	4	8	67	508	612	1490	838	2310	482	250
88435.1000	120	350	8,0	4	10	4	10	84	608	827	2460	1060	3490	668	250
88440.1000	120	400	8,0	4	12	4	12	101	603	1210	7180	1230	4960	979	307
88445.1000	120	450	8,0	4	14	4	14	118	701	1480	10100	1520	6980	1215	307
88450.1000	120	500	8,0	4	16	4	16	135	800	1800	13700	1840	9520	1482	307
88455.1000	120	550	8,0	4	18	4	18	151	899	2170	18300	2190	12600	1822	307
88460.1000	120	600	8,0	4	20	4	20	167	998	2540	23500	2570	16200	2129	307
88540.1000	140	400	8,0	4	16	4	16	92	639	1360	6000	1580	4760	1104	395
88545.1000	140	450	8,0	4	20	4	20	102	738	1740	8790	2120	7260	1488	395
88550.1000	140	500	8,0	4	22	4	22	118	838	2110	11900	2510	9640	1778	395
88555.1000	140	550	8,0	4	24	4	24	134	937	2570	16100	2940	12500	2217	395
88560.1000	140	600	8,0	4	28	4	28	151	1037	3060	21100	3550	16600	2632	395
88210.2000	120	100	5,0	6	10	6	10	14	197	830	594	817	601	437	120
88214.2000	120	140	5,0	6	16	6	16	31	330	1020	1080	1030	1100	710	120
88318.2000	160	180	5,0	8	24	8	24	43	413	1620	1850	1880	1980	1102	183
88322.2000	160	220	5,0	10	32	10	32	56	589	2250	3130	2440	3270	1628	183
88420.2000	240	200	8,0	6	8	6	8	29	263	1150	902	1550	1130	605	500
88425.2000	240	250	8,0	6	12	6	12	47	398	1360	1380	1770	1700	809	500
88430.2000	240	300	8,0	6	16	6	16	64	539	1650	2070	2060	2470	1077	500
88435.2000	240	350	8,0	6	20	6	20	80	682	2000	2990	2440	3500	1379	500
88440.2000	240	400	8,0	6	24	6	24	97	1017	2610	5310	2860	4890	1932	614
88445.2000	240	450	8,0	6	28	6	28	114	1167	3120	7200	3390	6600	2368	614
88450.2000	240	500	8,0	6	32	6	32	131	1317	3715	9620	3980	8710	2889	614
88455.2000	240	550	8,0	6	36	6	36	148	1466	4380	12600	4630	11200	3481	614
88460.2000	240	600	8,0	6	40	6	40	164	1616	5050	15900	5330	14200	4046	614
88420.0100	100	200	8	3	4	4	4	71	120	233	934	436	926	202	252
88425.0100	100	250	8	3	6	4	6	86	170	371	2100	612	1680	339	252
88430.0100	100	300	8	3	8	4	8	101	220	530	3890	828	2790	486	252
88435.0100	100	350	8	4	10	4	10	117	268	800	7330	1080	4330	727	252
88440.0100	100	400	8	4	12	4	12	132	318	1030	11200	1380	6370	937	252
88445.0100	100	450	8	4	14	4	14	163	367	1290	16100	1710	8650	1173	252
88450.0100	100	500	8	4	16	4	16	166	417	1580	22300	2090	12300	1432	252
88455.0100	100	550	8	4	18	4	18	183	467	1890	29900	2500	16300	1717	252
88460.0100	100	600	8	4	20	4	20	199	517	2230	39000	2960	21100	2026	252

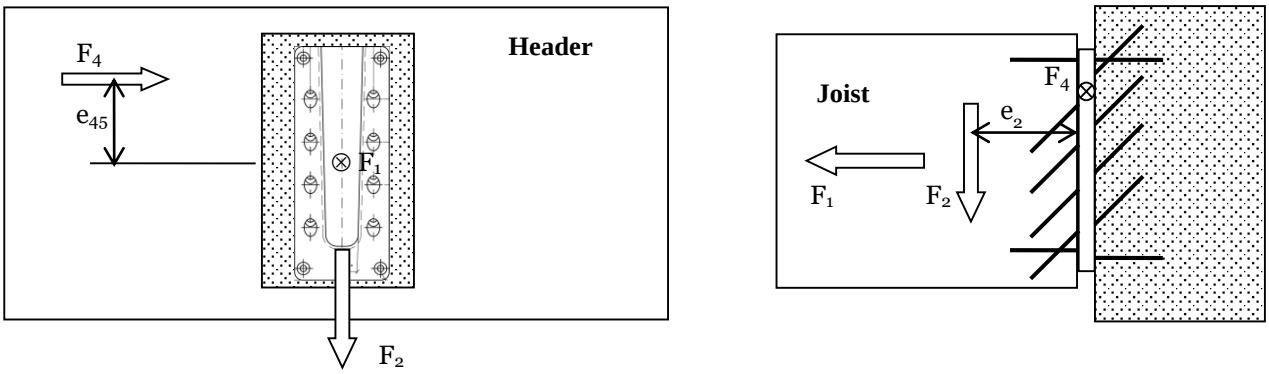

Figure B1: Definition of e_2 and e_{45}

For combined loading of the HVP connector, the following condition should be fulfilled:

$$\left(\frac{F_{1,Ed}}{F_{1,Rd}}\right)^2 + \left(\frac{F_{2,Ed}}{F_{2,Rd}}\right)^2 + \left(\frac{F_{3,Ed}}{F_{3,Rd}}\right)^2 + \left(\frac{F_{4,Ed}}{F_{4,Rd}}\right)^2 + \left(\frac{M_{tor,J,Ed}}{M_{tor,J,Rd}}\right)^2 \leq 1 \qquad \text{(B.16)}$$

Here, $F_{1,Ed}$, $F_{2,Ed}$, $F_{3,Ed}$ and $F_{4,Ed}$ are the design loads perpendicular to the connector plate and parallel and perpendicular to the direction of insertion, respectively.

B.2 Timber-to-concrete or timber-to-steel connections with screws and bolts or metal anchors - torsionally restrained header beam (HVP connectors 88210.3000 to 88460.3000)

Loading in the direction of insertion

$$F_{2,Rk} = \min\begin{cases} F_{2,J,Rk} \\ F_{2,H,Rk} \end{cases} \qquad \text{(B.17)}$$

$$F_{2,J,Rk} = \frac{1,25 \cdot n_{45,J} \cdot F_{ax,\alpha,J,Rk}}{\sqrt{2}} \qquad \text{(B.18)}$$

$$F_{2,H,Rk} = n_{90,H} \cdot F_{la,H,Rk} \qquad \text{(B.19)}$$

Where:

$n_{90,H}$ Number of bolts or metal anchors perpendicular to the header plate of the HVP connector, $n_{90,H} \geq 2$

$F_{la,H,Rk}$ Lateral capacity of a header bolt or metal anchor

B.3 Resistance to fire

If a fire resistance is required, the HVP connector plates shall be protected on all sides by a timber or wood-based panel of the thickness a_{fi}:

$$a_{fi} = \beta_n \cdot 1,5 \cdot (t_{req} - 5) \text{ in mm} \qquad \text{(B.20)}$$

Where:

a_{fi} Required thickness of the timber or wood-based panel protection

β_n Design notional charring rate under standard fire exposure according to EN 1995-1-2

t_{req} Required time of fire resistance in min, $t_{req} \leq 60$ min

The laterally loaded screws of the HVP connectors should be designed according to section 6.3.2 of EN 1995-1-2 „Eurocode 5 – Design of timber structures – Part 1-2: General – Structural fire design" as protected connections with steel plates as side members.

The axially loaded screws should be designed according to section 6.4 of EN 1995-1-2 „Eurocode 5 – Design of timber structures – Part 1-2: General – Structural fire design".

Annex C
Use of HVP connectors

h_P …Connector plate depth
b_P …Connector plate width
d_P …Total thickness of HVP connector plates

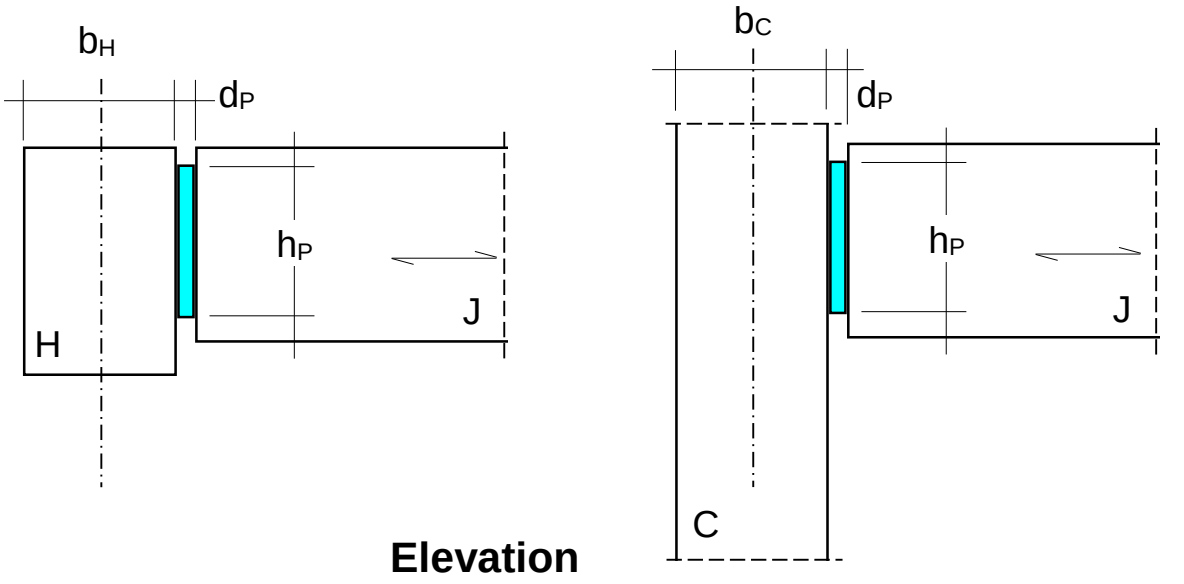

Elevation

C …Column
H …Header
J …Joist

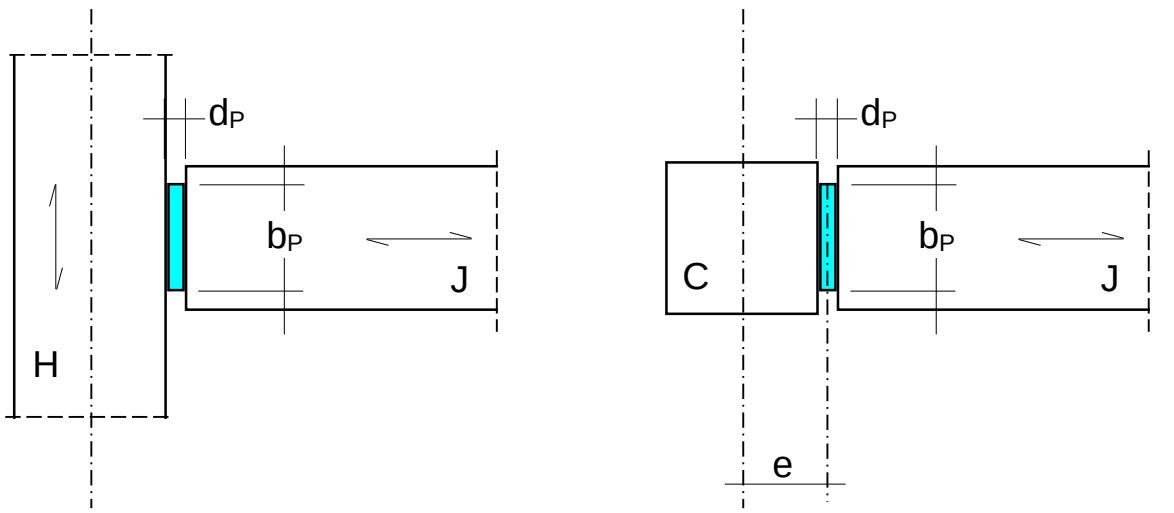

Top view

Dimensions in mm

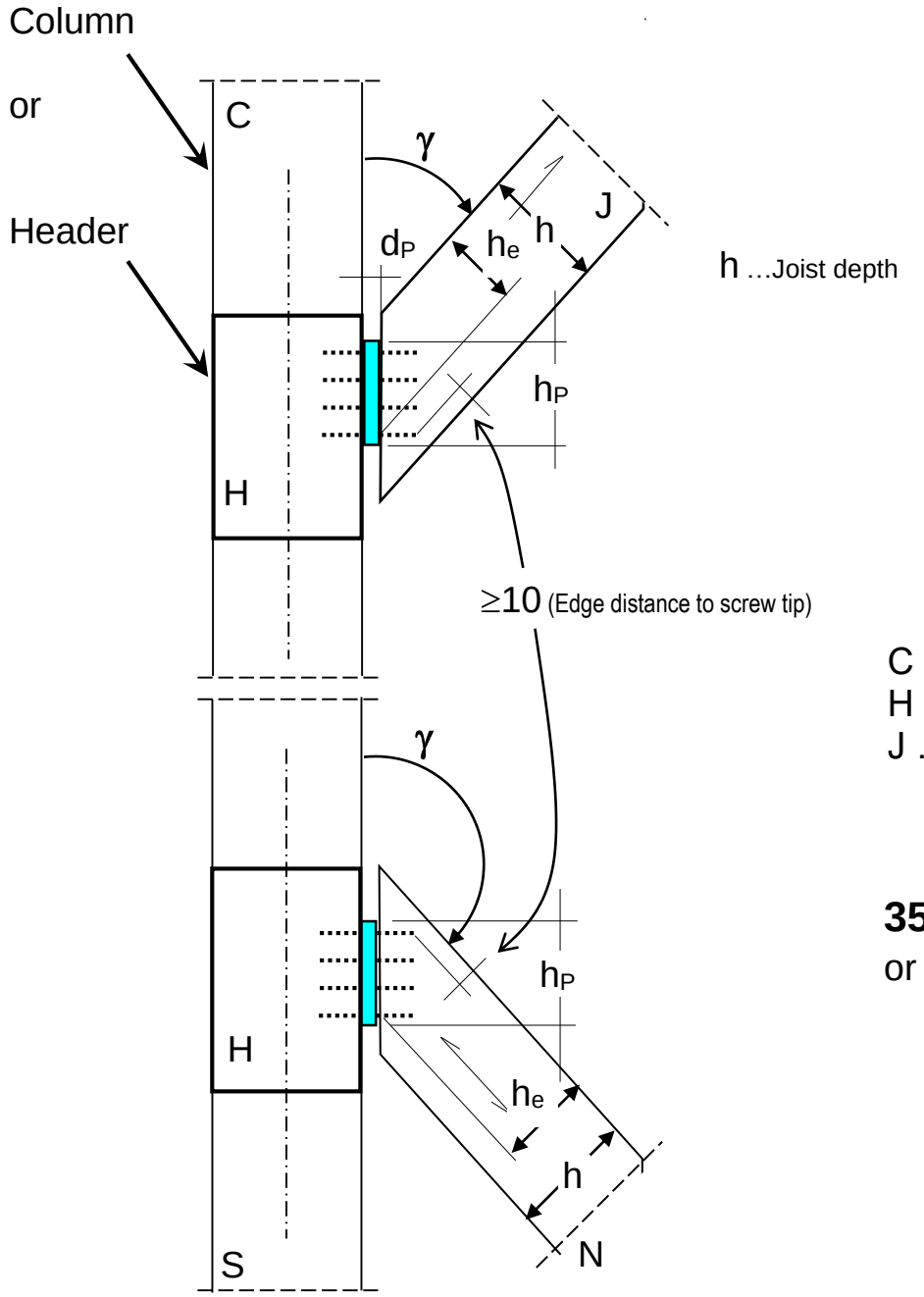

C …Column
H …Header
J …Joist

35° ≤ γ ≤ 145°
or **0°** or **180°**

Elevation

h_P …Connector plate depth
b_P …Connector plate width
d_P …Total thickness of HVP connector plates

Dimensions in mm

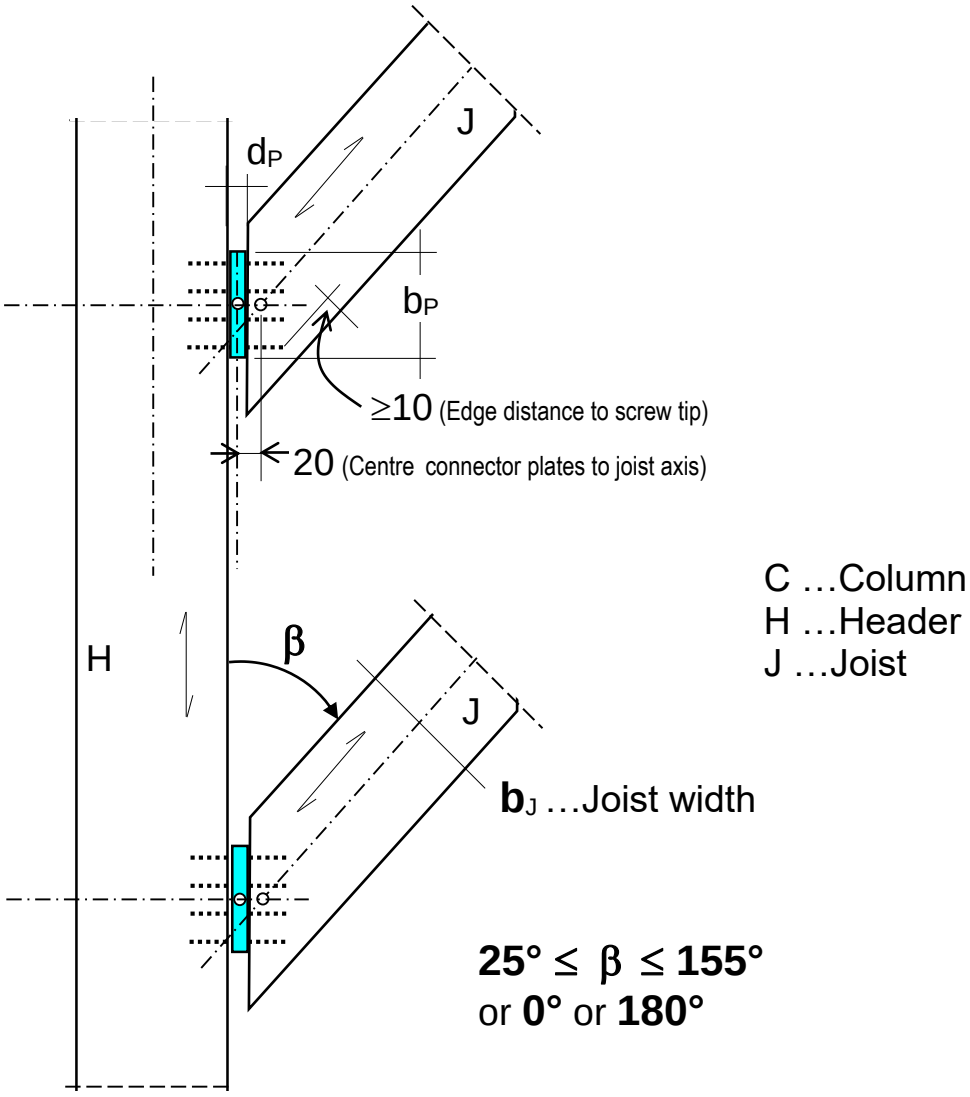

Top view

Dimensions in mm

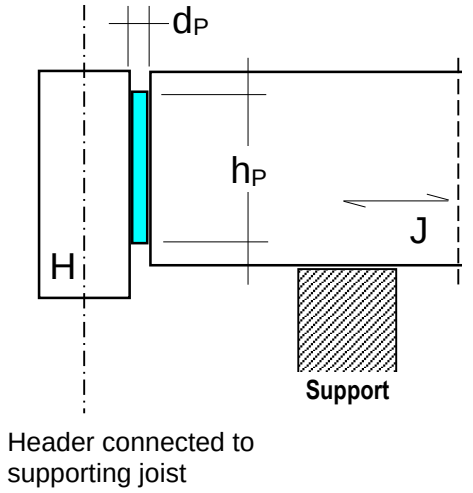

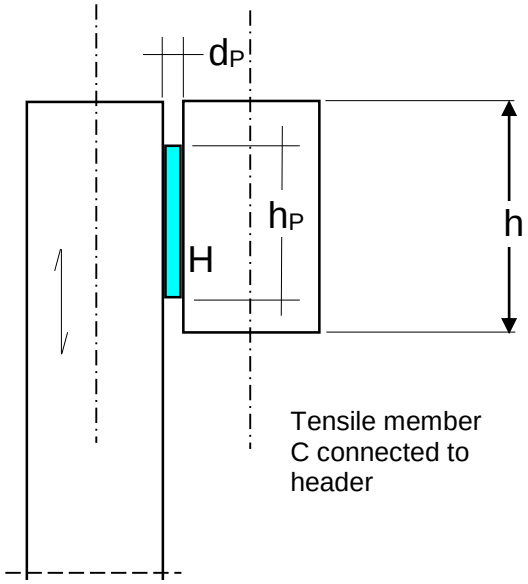

Elevation

C …Column
H …Header
J …Joist

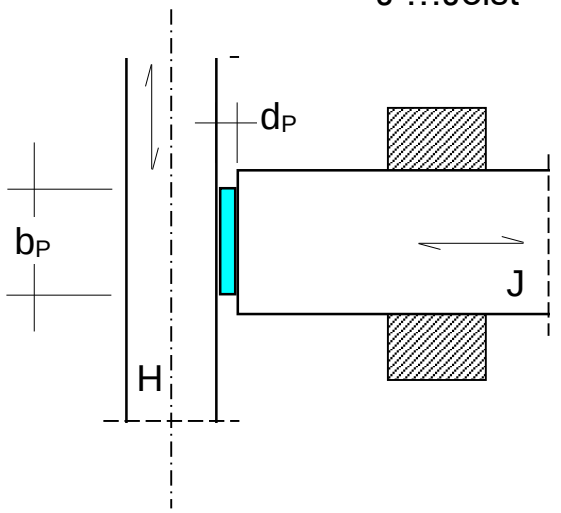

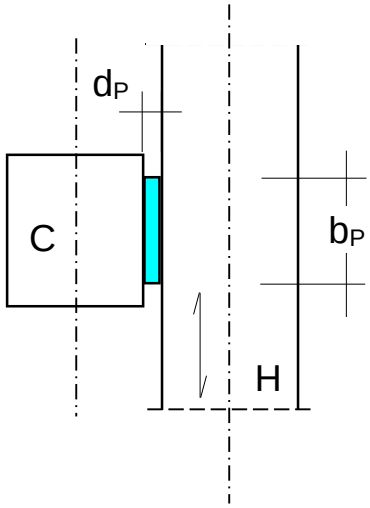

Top view

h_P …Connector plate depth
b_P …Connector plate width
d_P …Total thickness of HVP connector plates

Dimensions in mm

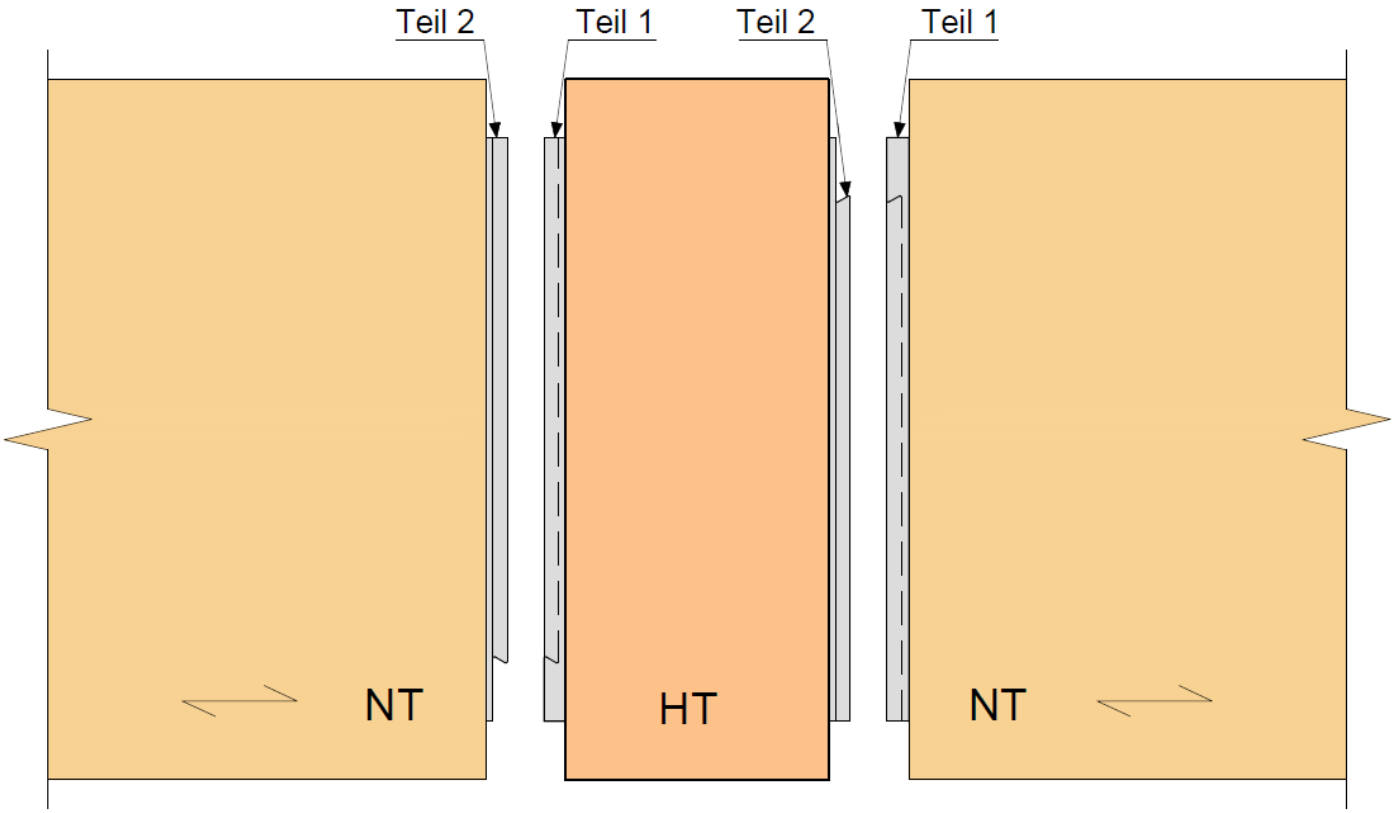
Teil 2
Teil 1
Teil 2
Teil 1
NT
HT
NT

Montage mit Schattenfuge

Draufsicht	Ansicht
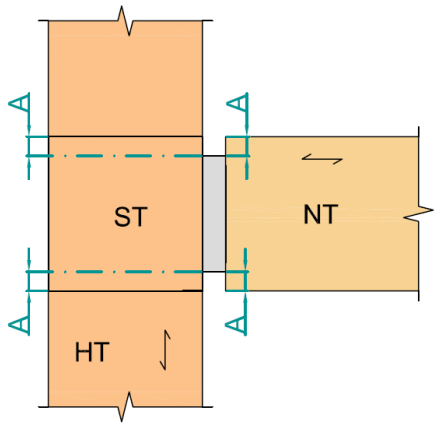	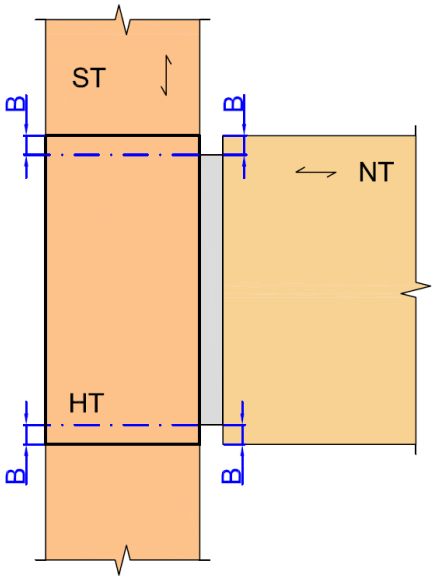

Verdeckte Montage

ausfräsen wahlweise in Haupträger oder Nebenträger möglich

Draufsicht	Ansicht