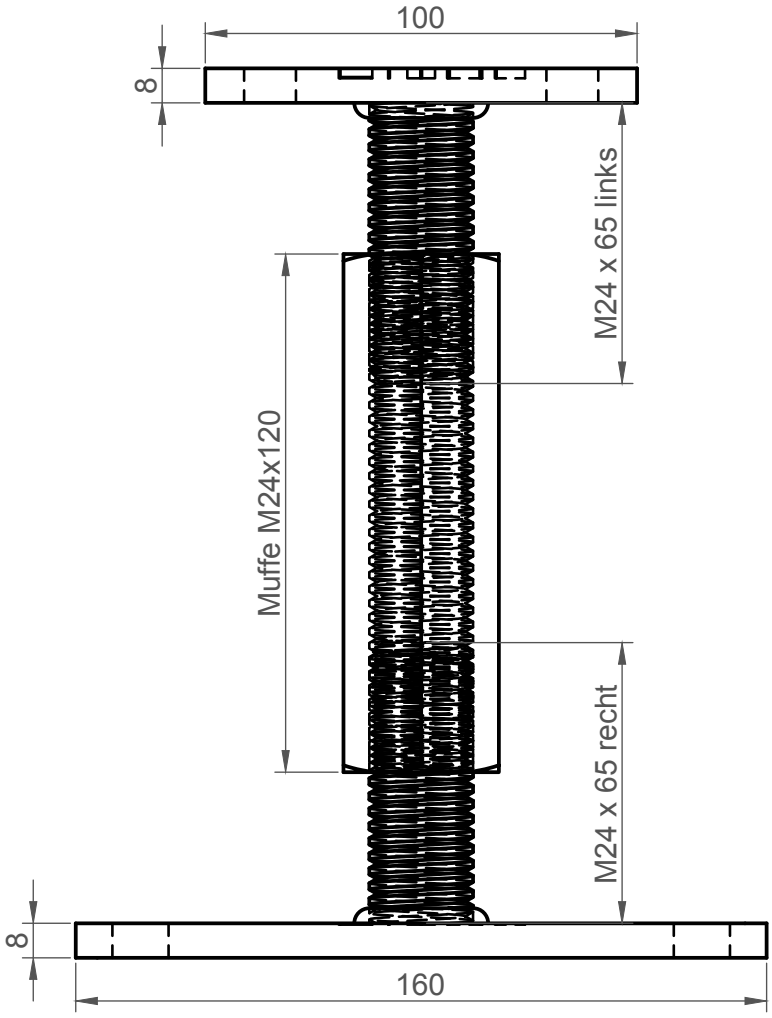
100
8
M24 x 65 links
Muffe M24x120
M24 x 65 recht
8
160

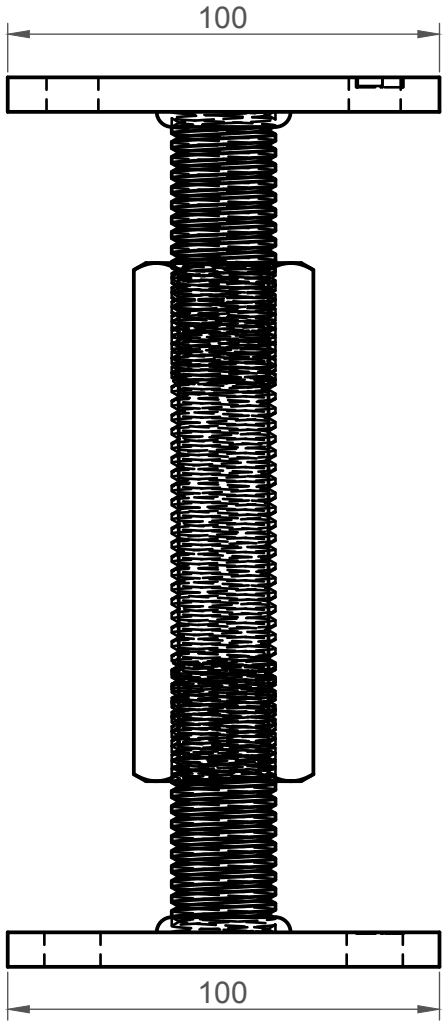
100
100

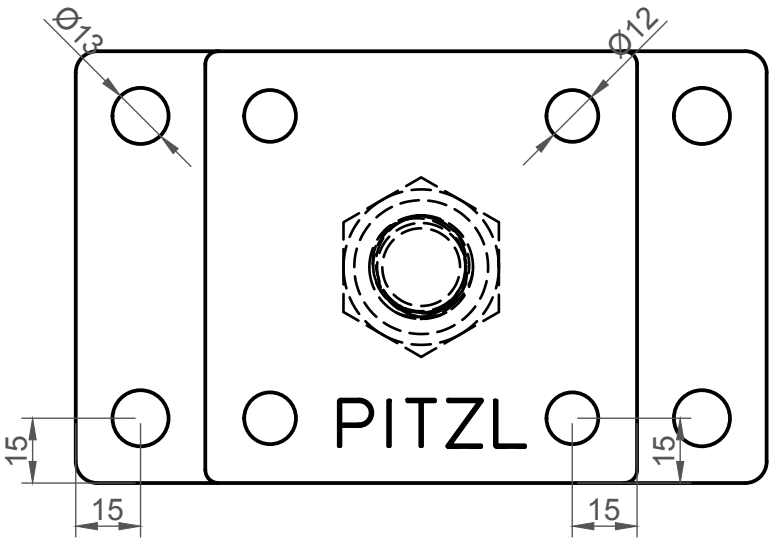
Ø13
Ø12
PITZL
15
15
15
15

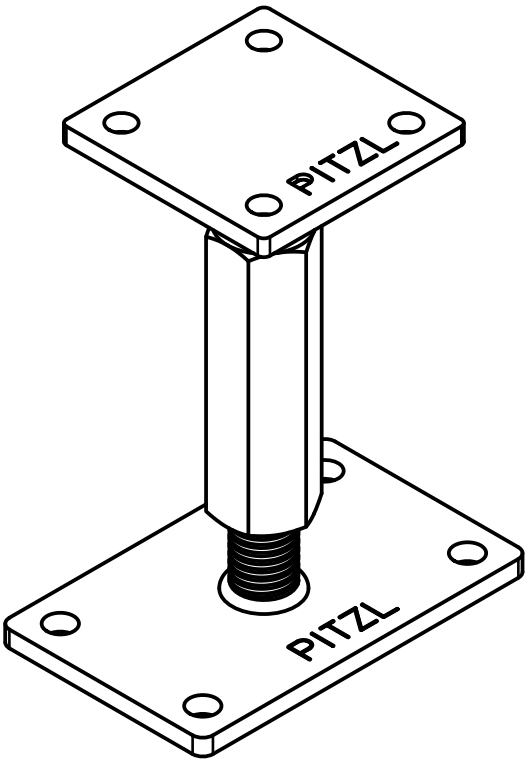
PITZL
PITZL